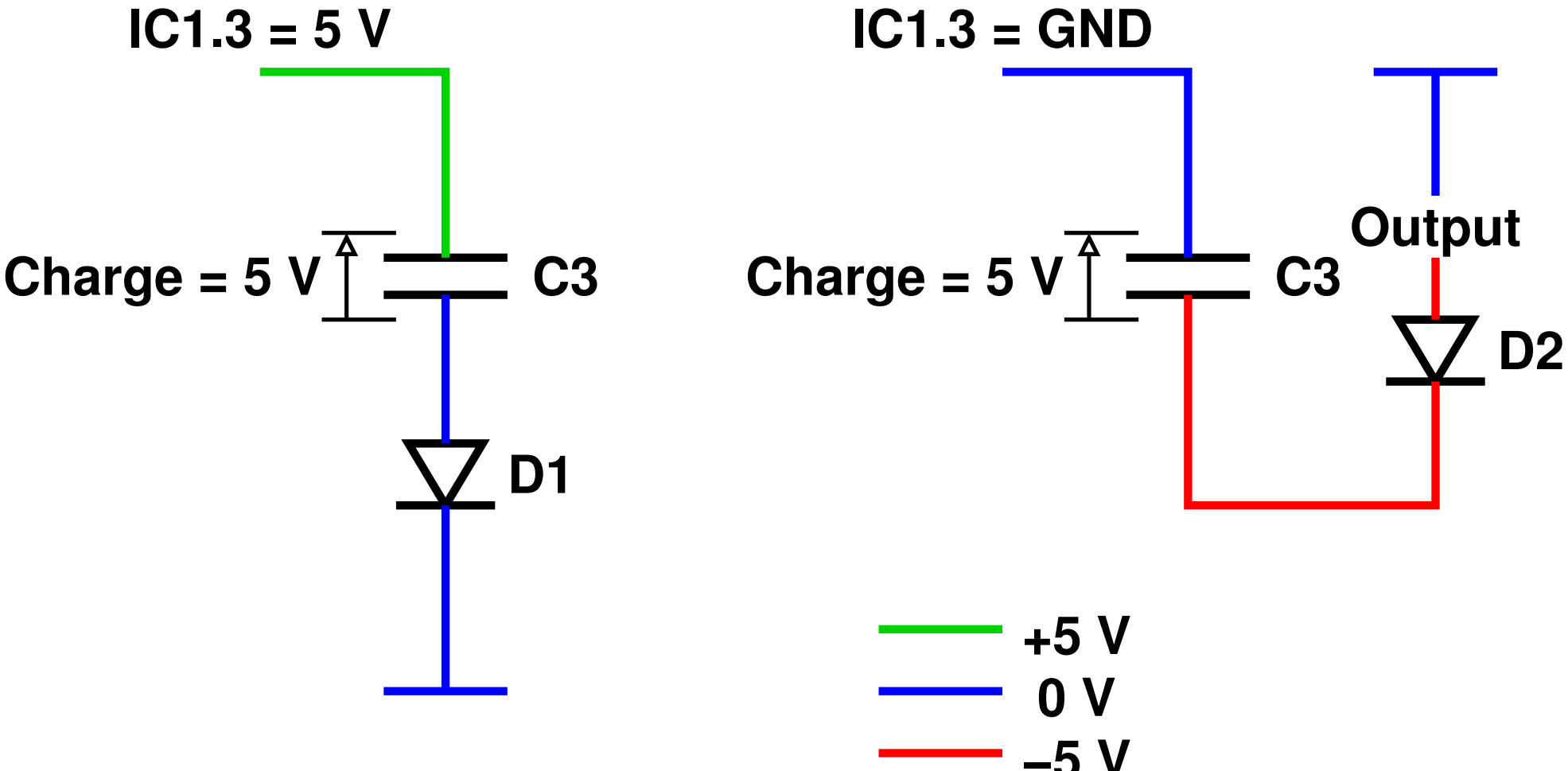
IC1.3 = 5 V
Charge = 5 V
C3
D1
IC1.3 = GND
Charge = 5 V
C3
Output
D2
+5 V
0 V
–5 V