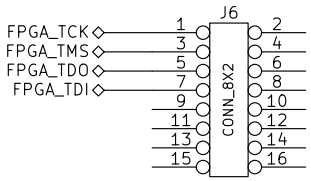
J6
CONN_8X2
FPGA_TCK
FPGA_TMS
FPGA_TDO
FPGA_TDI
1
2
3
4
5
6
7
8
9
10
11
12
13
14
15
16

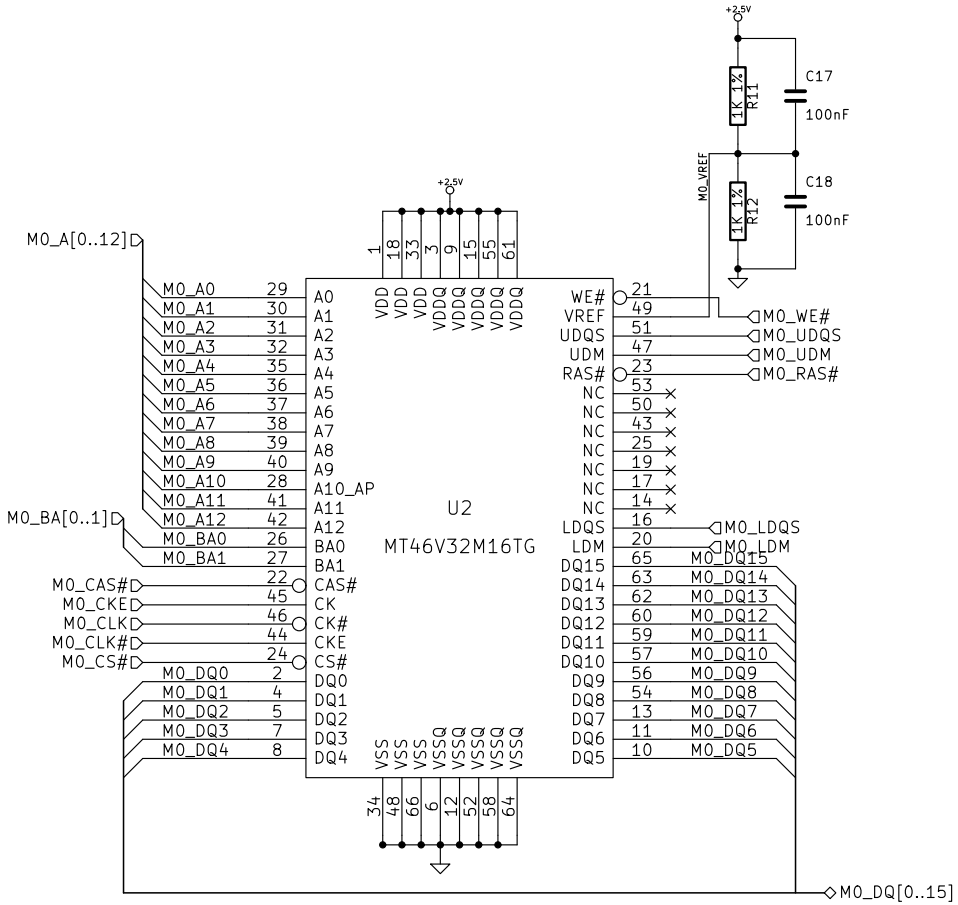
U2
MT46V32M16TG
M0_A[0..12]
M0_BA[0..1]
M0_CAS#
M0_CKE
M0_CLK
M0_CLK#
M0_CS#
M0_DQ[0..15]
M0_WE#
M0_UDQS
M0_UDM
M0_RAS#
M0_LDQS
M0_LDM
M0_VREF
R11 1K 1%
R12 1K 1%
C17 100nF
C18 100nF
+2.5V

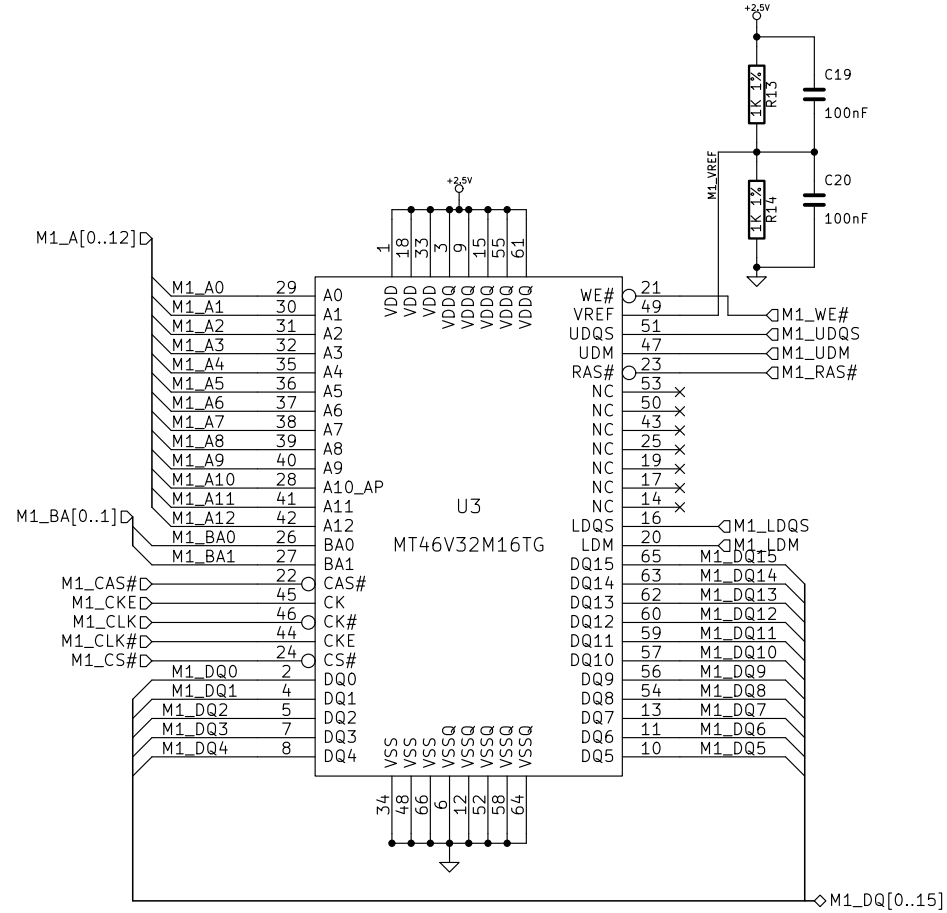
U3
MT46V32M16TG
M1_A[0..12]
M1_BA[0..1]
M1_CAS#
M1_CKE
M1_CLK
M1_CLK#
M1_CS#
M1_DQ[0..15]
M1_WE#
M1_UDQS
M1_UDM
M1_RAS#
M1_LDQS
M1_LDM
M1_VREF
R13 1K 1%
R14 1K 1%
C19 100nF
C20 100nF
+2.5V

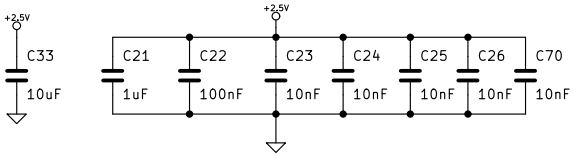
+2.5V
C33 10uF
C21 1uF
C22 100nF
C23 10nF
C24 10nF
C25 10nF
C26 10nF
C70 10nF

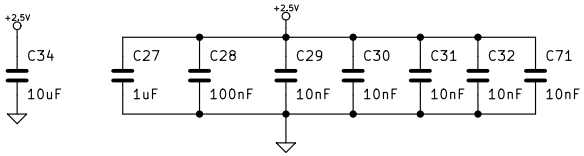
+2.5V
C34 10uF
C27 1uF
C28 100nF
C29 10nF
C30 10nF
C31 10nF
C32 10nF
C71 10nF

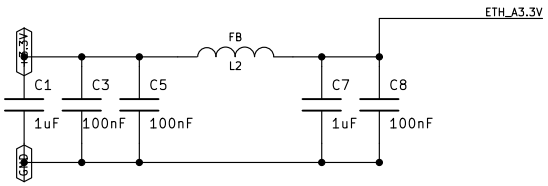

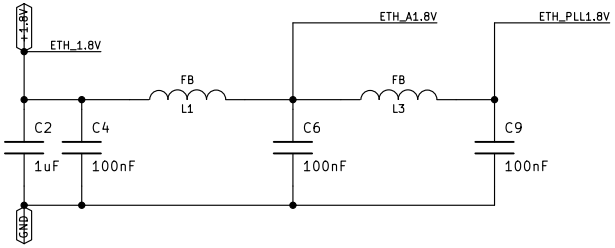

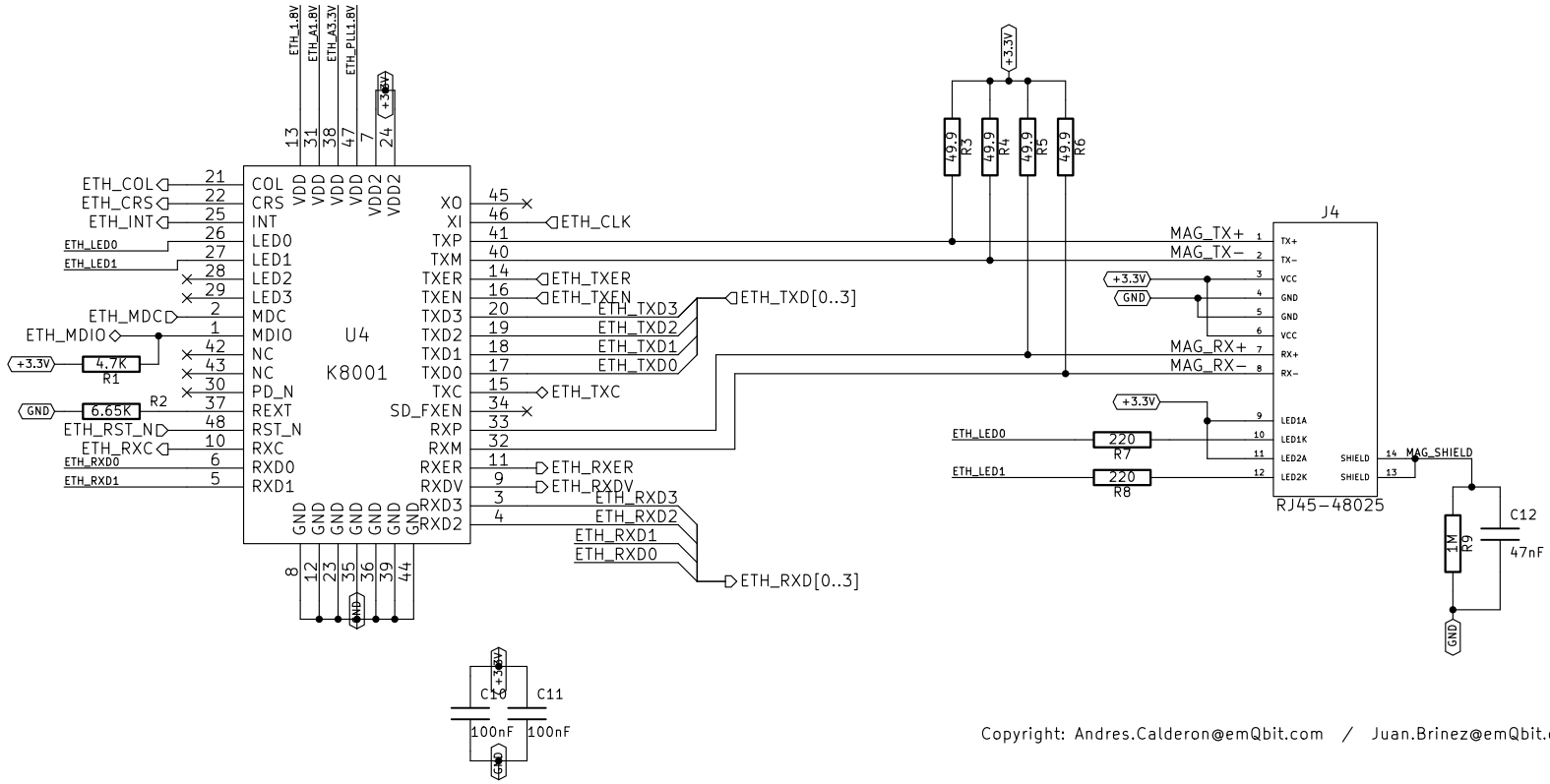

Copyright: Andres.Calderon@emQbit.com / Juan.Brinez@emQbit.com

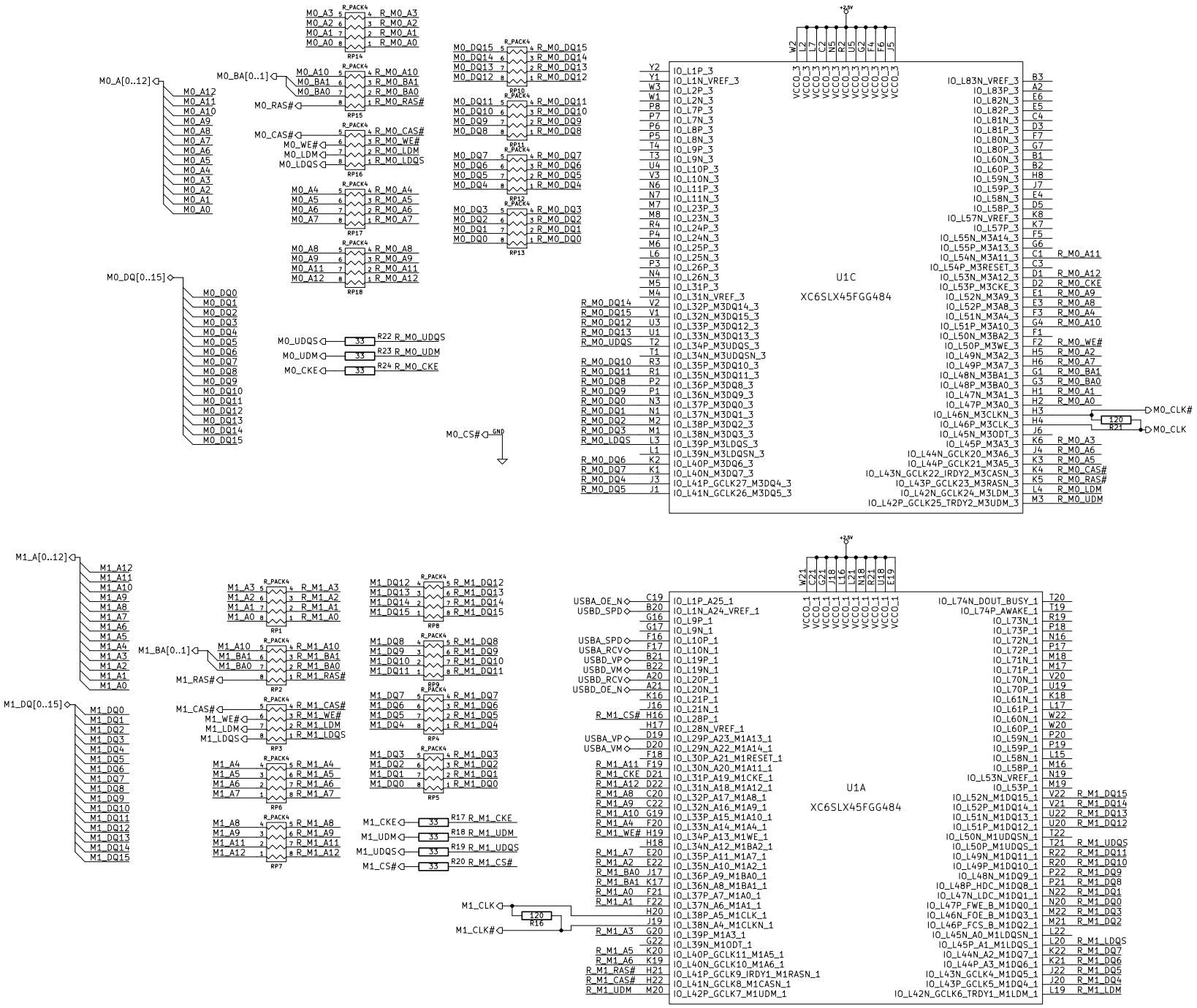
M0_A[0..12]
M0_BA[0..1]
M0_RAS#
M0_CAS#
M0_WE#
M0_LDM
M0_LDQS
M0_DQ[0..15]
M0_UDQS
M0_UDM
M0_CKE
M0_CS#
M0_CLK#
M0_CLK
U1C
XC6SLX45FGG484
M1_A[0..12]
M1_BA[0..1]
M1_RAS#
M1_CAS#
M1_WE#
M1_LDM
M1_LDQS
M1_DQ[0..15]
M1_CKE
M1_UDM
M1_UDQS
M1_CS#
M1_CLK
M1_CLK#
U1A
XC6SLX45FGG484

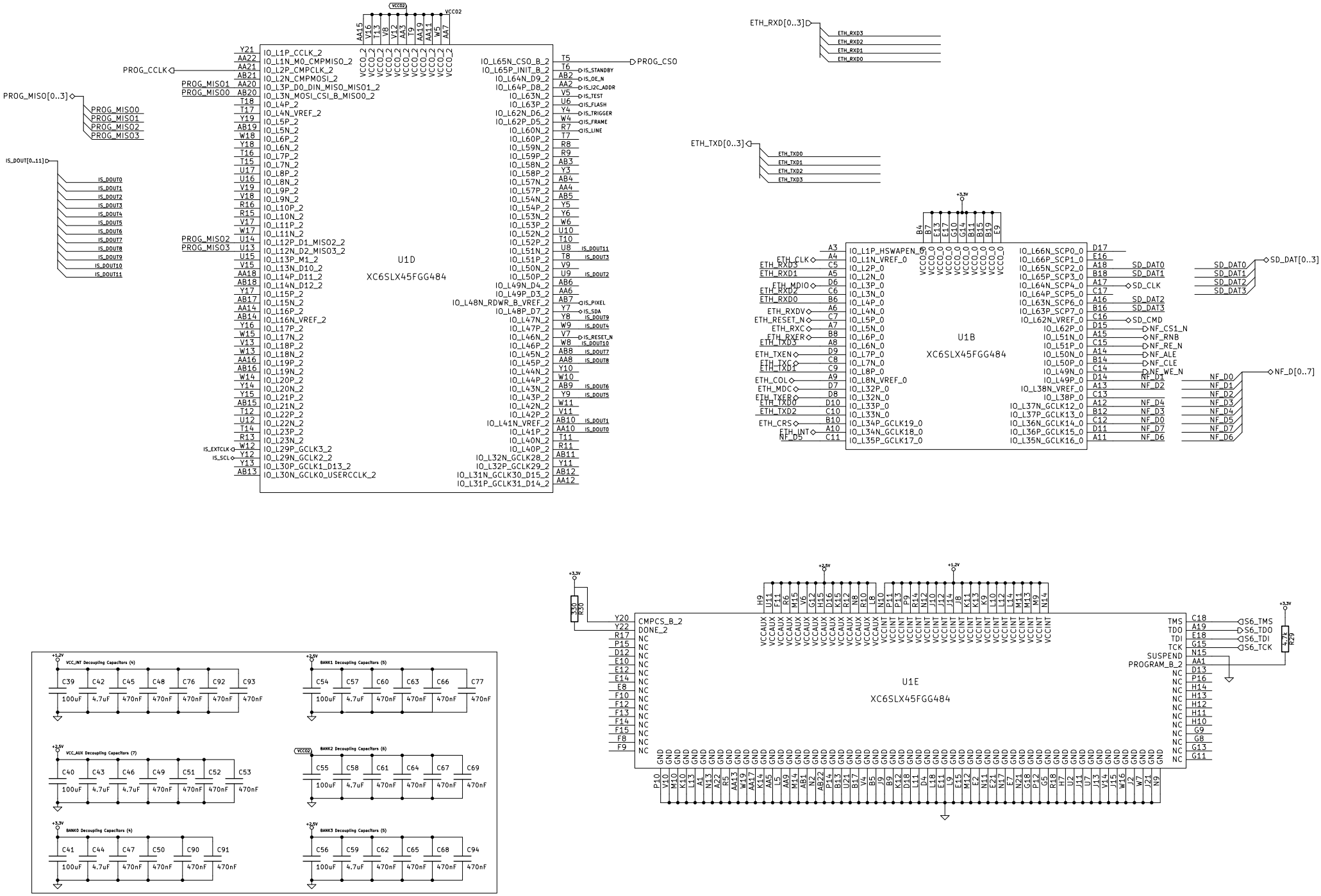
U1D
XC6SLX45FGG484
U1B
XC6SLX45FGG484
U1E
XC6SLX45FGG484
PROG_CCLK
PROG_MISO[0..3]
PROG_MISO0
PROG_MISO1
PROG_MISO2
PROG_MISO3
IS_DOUT[0..11]
IS_DOUT0
IS_DOUT1
IS_DOUT2
IS_DOUT3
IS_DOUT4
IS_DOUT5
IS_DOUT6
IS_DOUT7
IS_DOUT8
IS_DOUT9
IS_DOUT10
IS_DOUT11
IS_EXTCLK
IS_SCL
PROG_CS0
IS_STANDBY
IS_OE_N
IS_I2C_ADDR
IS_TEST
IS_FLASH
IS_TRIGGER
IS_FRAME
IS_LINE
IS_PIXEL
IS_SDA
IS_RESET_N
ETH_RXD[0..3]
ETH_RXD3
ETH_RXD2
ETH_RXD1
ETH_RXD0
ETH_TXD[0..3]
ETH_TXD0
ETH_TXD1
ETH_TXD2
ETH_TXD3
ETH_CLK
ETH_MDIO
ETH_RXDV
ETH_RESET_N
ETH_RXC
ETH_RXER
ETH_TXD3
ETH_TXEN
ETH_TXC
ETH_TXD1
ETH_COL
ETH_MDC
ETH_TXER
ETH_TXD0
ETH_CRS
ETH_INT
NF_D5
SD_DAT0
SD_DAT1
SD_DAT2
SD_DAT3
SD_CLK
SD_CMD
SD_DAT[0..3]
NF_CS1_N
NF_RNB
NF_RE_N
NF_ALE
NF_CLE
NF_WE_N
NF_D1
NF_D2
NF_D4
NF_D3
NF_D0
NF_D7
NF_D6
NF_D[0..7]
S6_TMS
S6_TDO
S6_TDI
S6_TCK
TMS
TDO
TDI
TCK
SUSPEND
PROGRAM_B_2
CMPCS_B_2
DONE_2
330
R30
4.7K
R29
VCC_INT Decoupling Capacitors (4)
BANK1 Decoupling Capacitors (5)
VCC_AUX Decoupling Capacitors (7)
BANK2 Decoupling Capacitors (6)
BANK0 Decoupling Capacitors (4)
BANK3 Decoupling Capacitors (5)

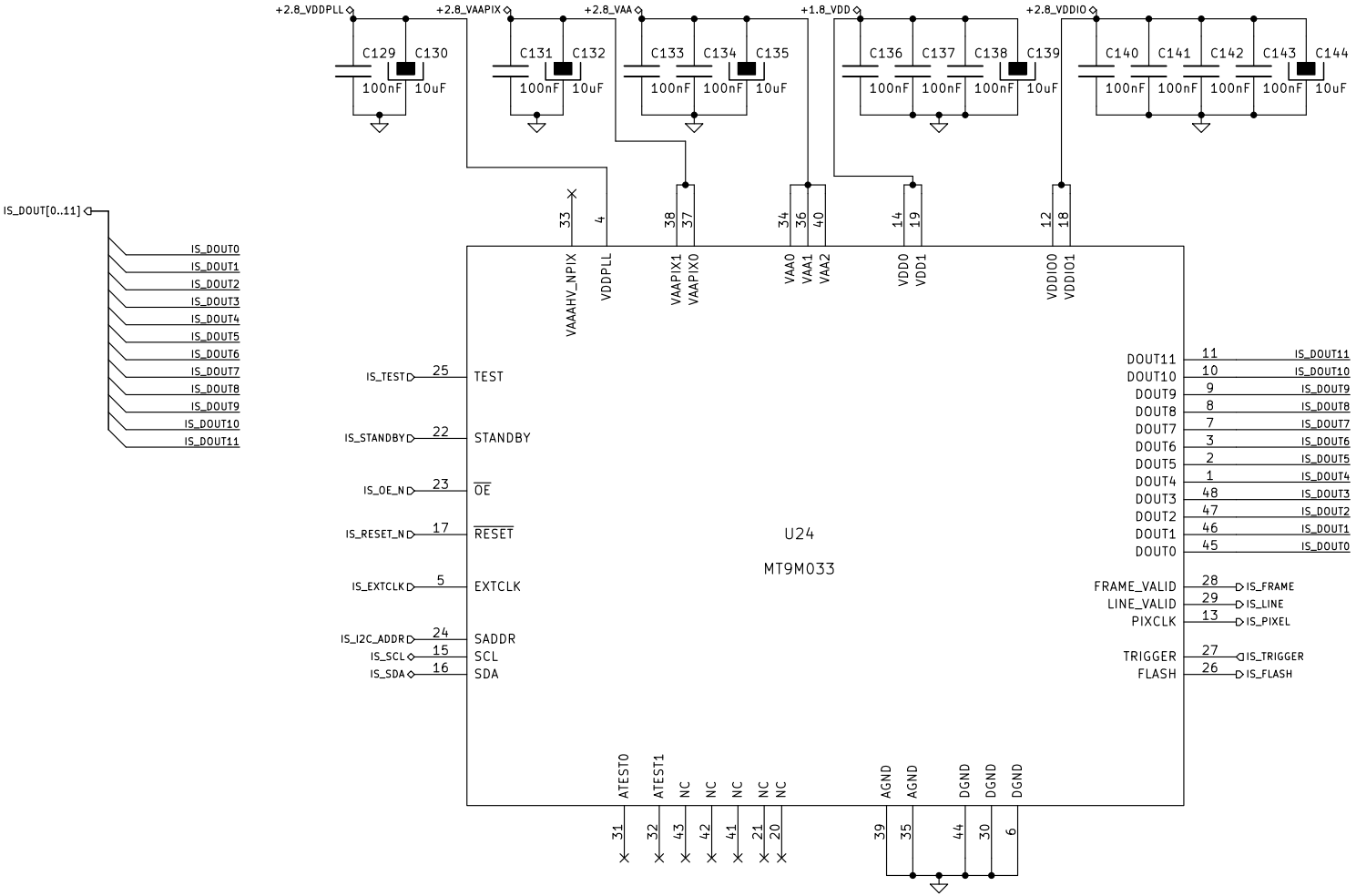
+2.8_VDDPLL
+2.8_VAAPIX
+2.8_VAA
+1.8_VDD
+2.8_VDDIO
C129 C130 C131 C132 C133 C134 C135 C136 C137 C138 C139 C140 C141 C142 C143 C144
100nF 10uF
IS_DOUT[0..11]
IS_DOUT0 IS_DOUT1 IS_DOUT2 IS_DOUT3 IS_DOUT4 IS_DOUT5 IS_DOUT6 IS_DOUT7 IS_DOUT8 IS_DOUT9 IS_DOUT10 IS_DOUT11
VAAAHV_NPIX VDDPLL VAAPIX1 VAAPIX0 VAA0 VAA1 VAA2 VDD0 VDD1 VDDIO0 VDDIO1
IS_TEST 25 TEST
IS_STANDBY 22 STANDBY
IS_OE_N 23 OE
IS_RESET_N 17 RESET
IS_EXTCLK 5 EXTCLK
IS_I2C_ADDR 24 SADDR
IS_SCL 15 SCL
IS_SDA 16 SDA
U24
MT9M033
DOUT11 11 IS_DOUT11
DOUT10 10 IS_DOUT10
DOUT9 9 IS_DOUT9
DOUT8 8 IS_DOUT8
DOUT7 7 IS_DOUT7
DOUT6 3 IS_DOUT6
DOUT5 2 IS_DOUT5
DOUT4 1 IS_DOUT4
DOUT3 48 IS_DOUT3
DOUT2 47 IS_DOUT2
DOUT1 46 IS_DOUT1
DOUT0 45 IS_DOUT0
FRAME_VALID 28 IS_FRAME
LINE_VALID 29 IS_LINE
PIXCLK 13 IS_PIXEL
TRIGGER 27 IS_TRIGGER
FLASH 26 IS_FLASH
ATEST0 ATEST1 NC NC NC NC NC AGND AGND DGND DGND DGND
31 32 43 42 41 21 20 39 35 44 30 6

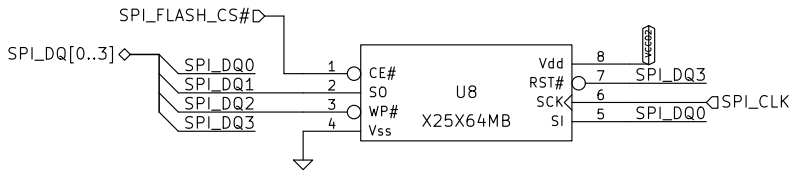
SPI_FLASH_CS#
SPI_DQ[0..3]
SPI_DQ0
SPI_DQ1
SPI_DQ2
SPI_DQ3
CE#
SO
WP#
Vss
U8
X25X64MB
Vdd
RST#
SCK
SI
SPI_DQ3
SPI_CLK
SPI_DQ0

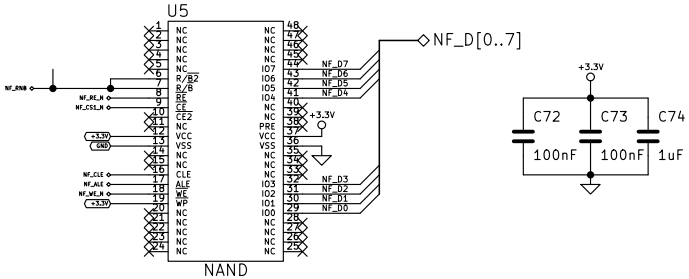
U5
NF_D[0..7]
NF_D7
NF_D6
NF_D5
NF_D4
NF_D3
NF_D2
NF_D1
NF_D0
+3.3V
C72
C73
C74
100nF
100nF
1uF
NAND

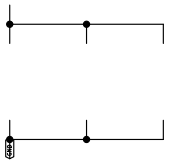

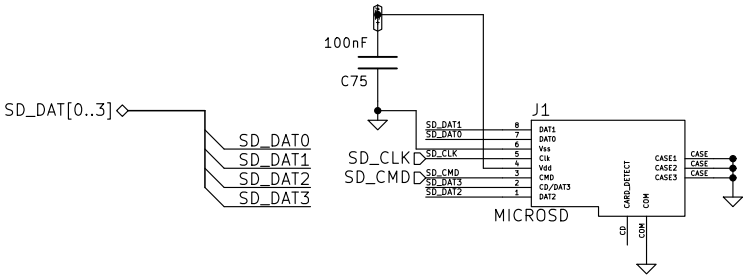
100nF
C75
SD_DAT[0..3]
SD_DAT0
SD_DAT1
SD_DAT2
SD_DAT3
SD_CLK
SD_CMD
J1
MICROSD
CASE1
CASE2
CASE3
CASE
CASE
CASE

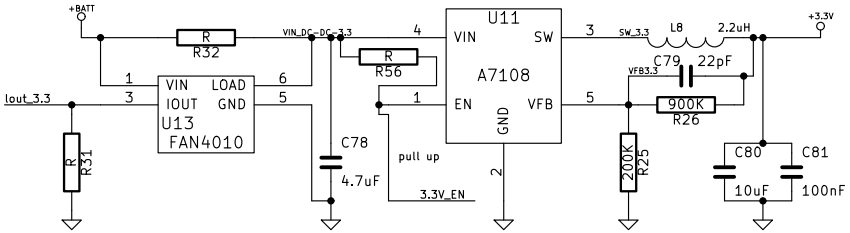
+BATT
R
R32
VIN_DC-DC-3.3
R
R56
U11
VIN
SW
A7108
EN
GND
VFB
SW_3.3
L8
2.2uH
+3.3V
C79
22pF
VFB3.3
900K
R26
Iout_3.3
VIN
LOAD
IOUT
GND
U13
FAN4010
R
R31
C78
4.7uF
pull up
3.3V_EN
200K
R25
C80
10uF
C81
100nF

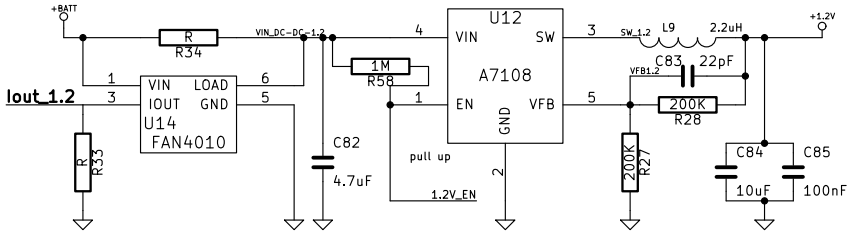
+BATT
R
R34
VIN_DC-DC-1.2
1M
R58
U12
VIN
SW
A7108
EN
GND
VFB
SW_1.2
L9
2.2uH
+1.2V
C83
22pF
VFB1.2
200K
R28
Iout_1.2
VIN
LOAD
IOUT
GND
U14
FAN4010
R
R33
C82
4.7uF
pull up
1.2V_EN
200K
R27
C84
10uF
C85
100nF

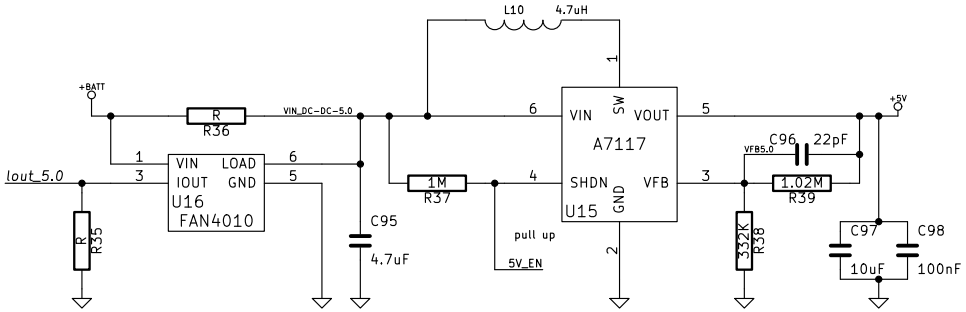
L10
4.7uH
+BATT
R
R36
VIN_DC-DC-5.0
VIN
VOUT
SW
A7117
SHDN
GND
VFB
U15
+5V
C96
22pF
VFB5.0
1.02M
R39
Iout_5.0
VIN
LOAD
IOUT
GND
U16
FAN4010
R
R35
C95
4.7uF
1M
R37
pull up
5V_EN
332K
R38
C97
10uF
C98
100nF

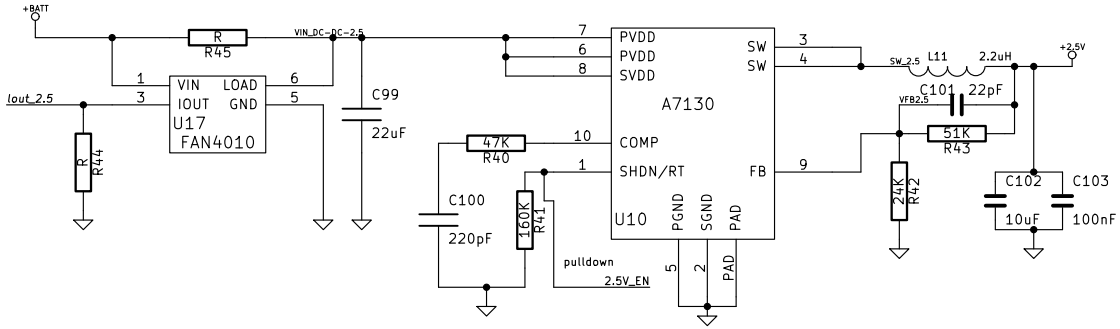
+BATT
R
R45
VIN_DC-DC-2.5
Iout_2.5
VIN
LOAD
IOUT
GND
U17
FAN4010
R
R44
C99
22uF
PVDD
PVDD
SVDD
SW
SW
A7130
COMP
SHDN/RT
FB
U10
PGND
SGND
PAD
47K
R40
C100
220pF
160K
R41
pulldown
2.5V_EN
SW_2.5
L11
2.2uH
+2.5V
C101
22pF
VFB2.5
51K
R43
24K
R42
C102
10uF
C103
100nF

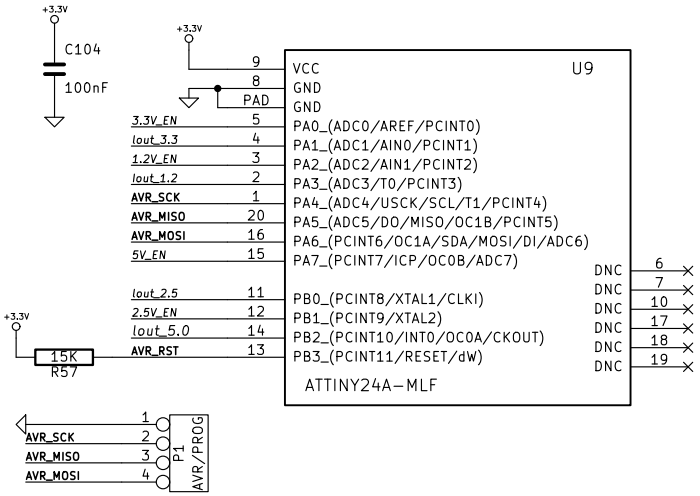
+3.3V
C104
100nF
+3.3V
VCC
GND
GND
PAD
U9
3.3V_EN
Iout_3.3
1.2V_EN
Iout_1.2
AVR_SCK
AVR_MISO
AVR_MOSI
5V_EN
PA0_(ADC0/AREF/PCINT0)
PA1_(ADC1/AIN0/PCINT1)
PA2_(ADC2/AIN1/PCINT2)
PA3_(ADC3/T0/PCINT3)
PA4_(ADC4/USCK/SCL/T1/PCINT4)
PA5_(ADC5/DO/MISO/OC1B/PCINT5)
PA6_(PCINT6/OC1A/SDA/MOSI/DI/ADC6)
PA7_(PCINT7/ICP/OC0B/ADC7)
Iout_2.5
2.5V_EN
Iout_5.0
AVR_RST
PB0_(PCINT8/XTAL1/CLKI)
PB1_(PCINT9/XTAL2)
PB2_(PCINT10/INT0/OC0A/CKOUT)
PB3_(PCINT11/RESET/dW)
ATTINY24A-MLF
DNC
+3.3V
15K
R57
AVR_SCK
AVR_MISO
AVR_MOSI
P1
AVR/PROG

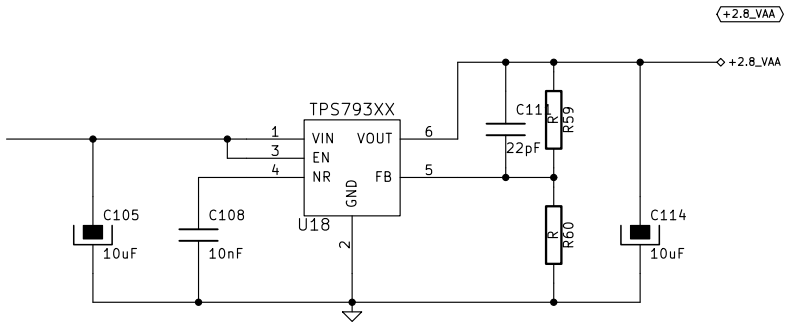
+2.8_VAA
+2.8_VAA
TPS793XX
VIN
EN
NR
GND
VOUT
FB
U18
C105
10uF
C108
10nF
C111
22pF
R59
R60
C114
10uF

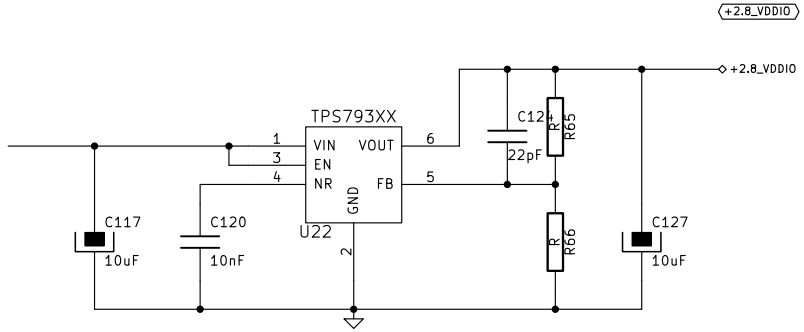
+2.8_VDDIO
+2.8_VDDIO
TPS793XX
VIN
EN
NR
GND
VOUT
FB
U22
C117
10uF
C120
10nF
C124
22pF
R65
R66
C127
10uF

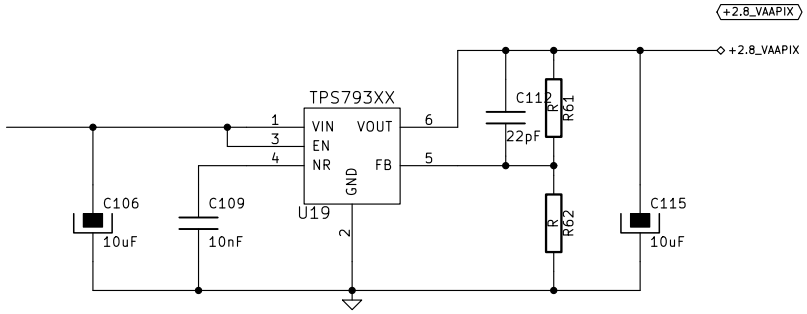
+2.8_VAAPIX
+2.8_VAAPIX
TPS793XX
VIN
EN
NR
GND
VOUT
FB
U19
C106
10uF
C109
10nF
C112
22pF
R61
R62
C115
10uF

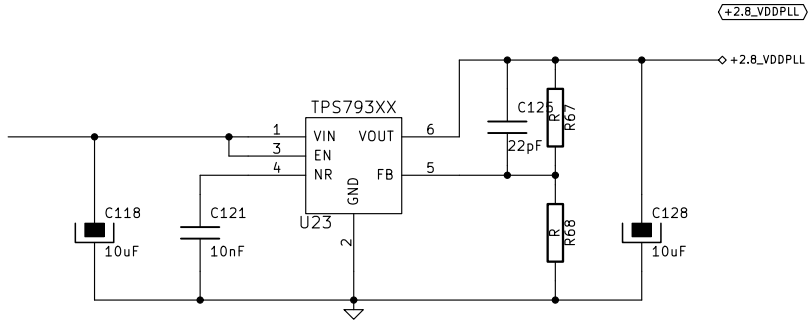
+2.8_VDDPLL
+2.8_VDDPLL
TPS793XX
VIN
EN
NR
GND
VOUT
FB
U23
C118
10uF
C121
10nF
C125
22pF
R67
R68
C128
10uF

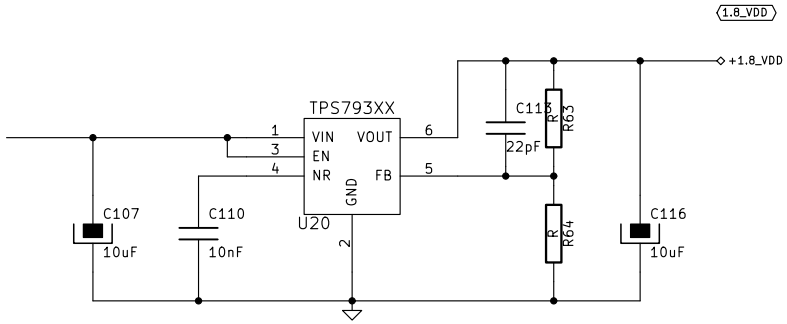
1.8_VDD
+1.8_VDD
TPS793XX
VIN
EN
NR
GND
VOUT
FB
U20
C107
10uF
C110
10nF
C113
22pF
R63
R64
C116
10uF

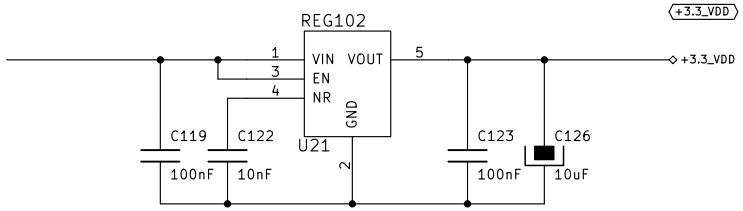
+3.3_VDD
+3.3_VDD
REG102
VIN
EN
NR
GND
VOUT
U21
C119
100nF
C122
10nF
C123
100nF
C126
10uF

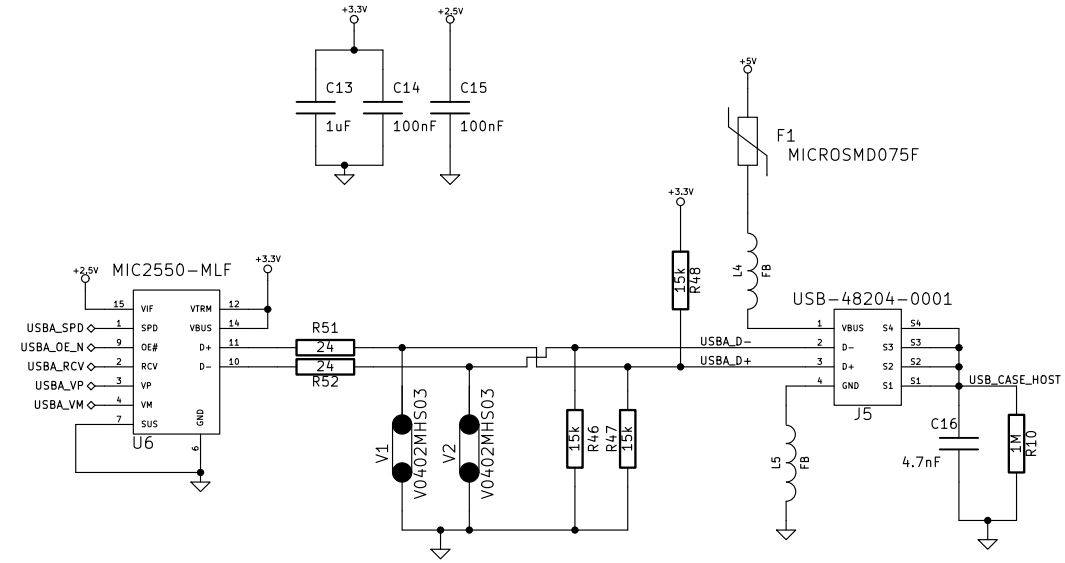

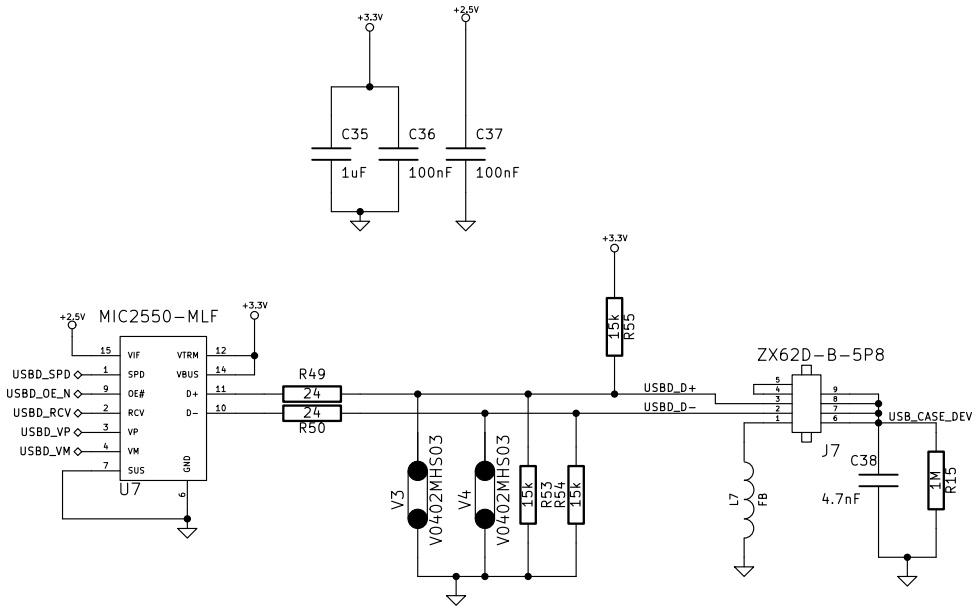

Copyright: Andres.Calderon@emQbit.com / Juan.Brinez@emQbit.com

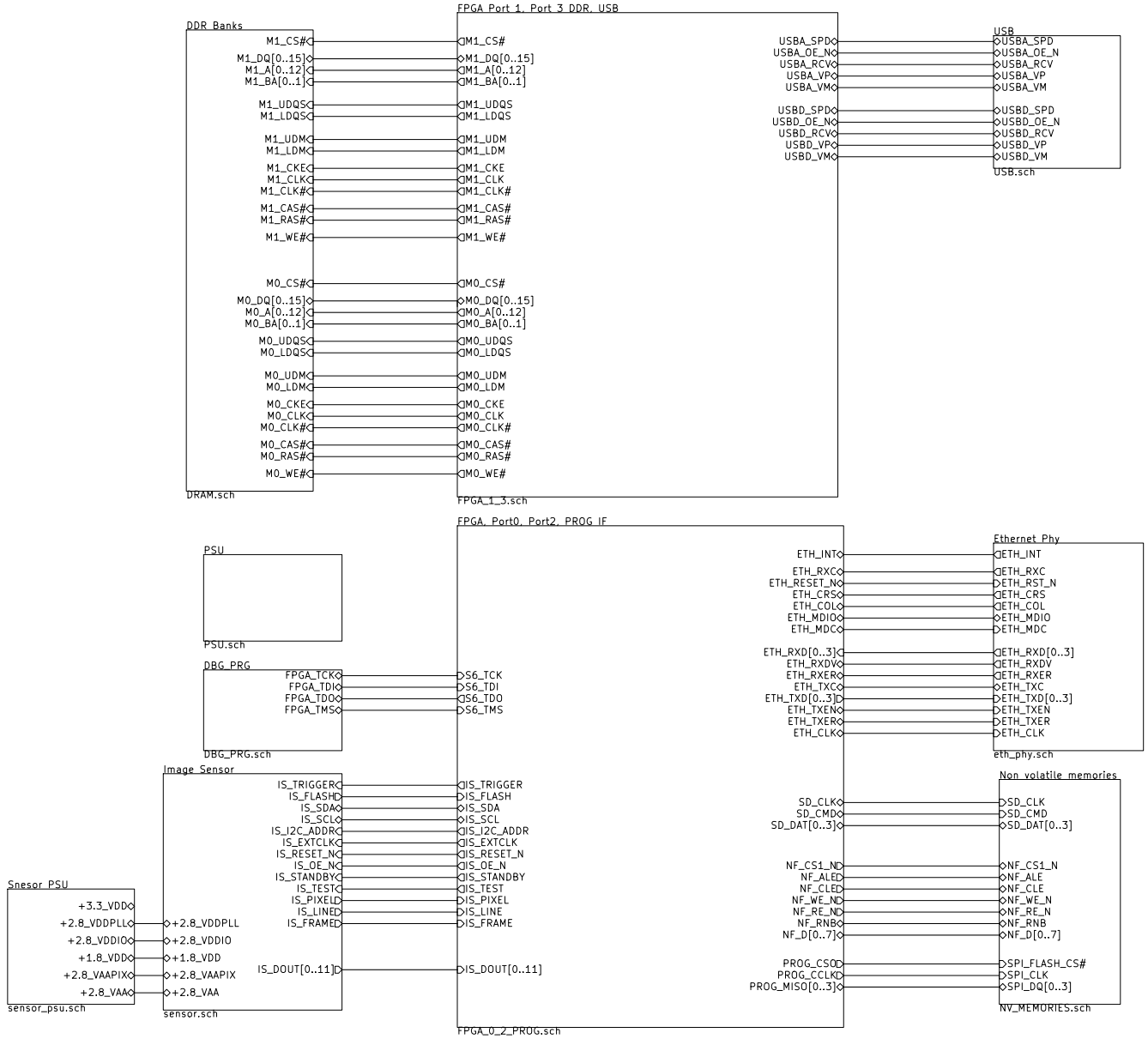

Copyright: Andres.Calderon@emQbit.com / Juan.Brinez@emQbit.c