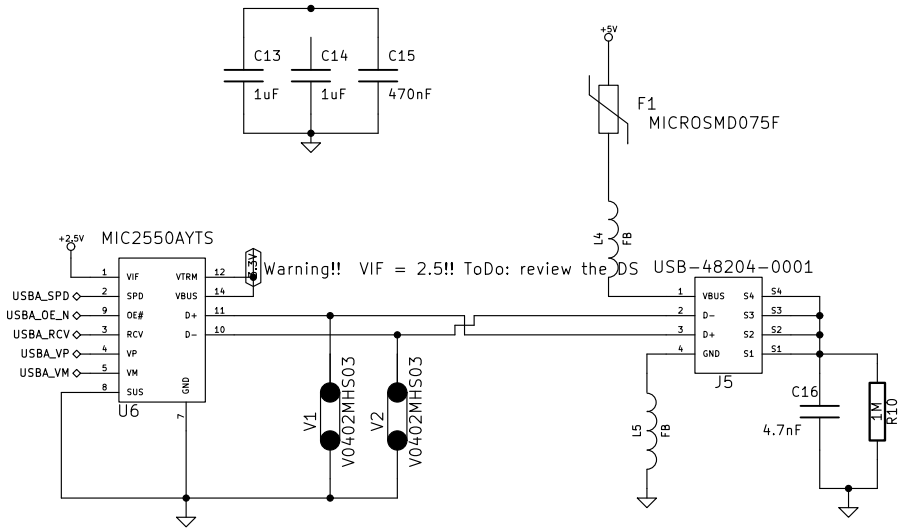

Copyright: Andres.Calderon@emQbit.com / Juan.Brinez@emQbit.cor

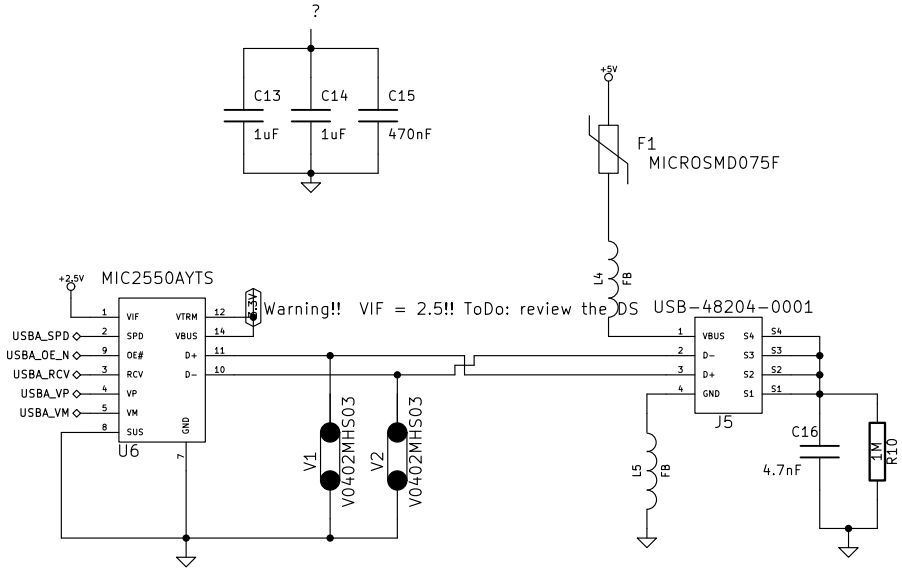

Copyright: Andres.Calderon@emQbit.com / Juan.Brinez@emQbit.cor