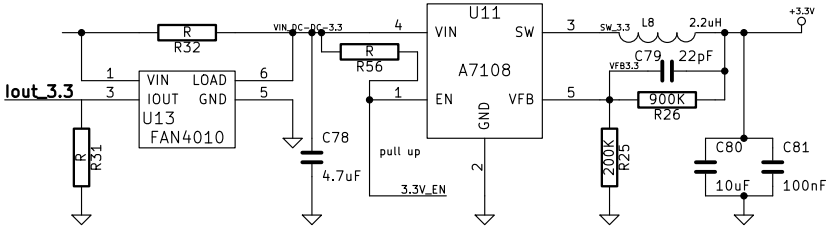
Iout_3.3
R32
R31
U13
FAN4010
VIN
LOAD
IOUT
GND
VIN_DC-DC-3.3
R56
C78
4.7uF
U11
A7108
VIN
SW
EN
VFB
GND
pull up
3.3V_EN
SW_3.3
L8
2.2uH
+3.3V
C79
22pF
VFB3.3
900K
R26
200K
R25
C80
10uF
C81
100nF

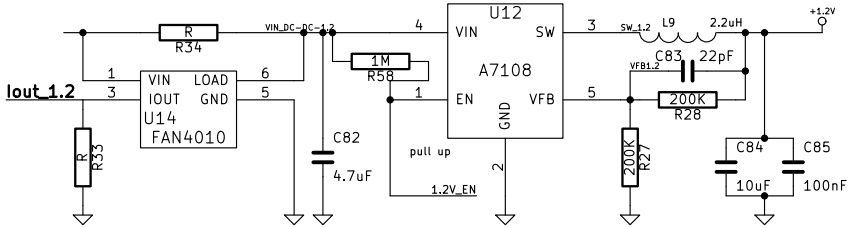
Iout_1.2
R34
R33
U14
FAN4010
VIN
LOAD
IOUT
GND
VIN_DC-DC-1.2
1M
R58
C82
4.7uF
U12
A7108
VIN
SW
EN
VFB
GND
pull up
1.2V_EN
SW_1.2
L9
2.2uH
+1.2V
C83
22pF
VFB1.2
200K
R28
200K
R27
C84
10uF
C85
100nF

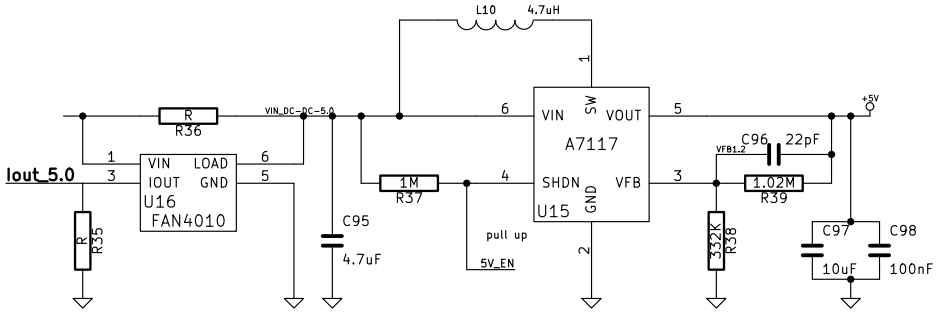
L10
4.7uH
Iout_5.0
R36
R35
U16
FAN4010
VIN
LOAD
IOUT
GND
VIN_DC-DC-5.0
1M
R37
C95
4.7uF
A7117
VIN
SW
VOUT
SHDN
VFB
GND
U15
pull up
5V_EN
+5V
C96
22pF
VFB1.2
1.02M
R39
332K
R38
C97
10uF
C98
100nF

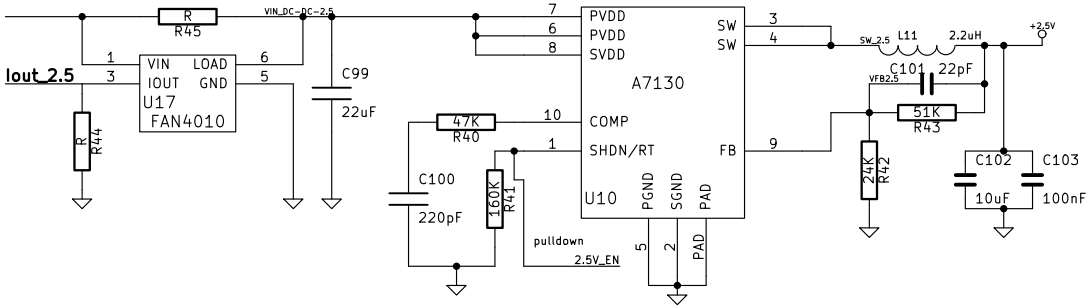
Iout_2.5
R45
R44
U17
FAN4010
VIN
LOAD
IOUT
GND
VIN_DC-DC-2.5
C99
22uF
47K
R40
C100
220pF
160K
R41
pulldown
2.5V_EN
A7130
PVDD
PVDD
SVDD
SW
SW
COMP
SHDN/RT
FB
PGND
SGND
PAD
U10
SW_2.5
L11
2.2uH
+2.5V
C101
22pF
VFB2.5
51K
R43
24K
R42
C102
10uF
C103
100nF

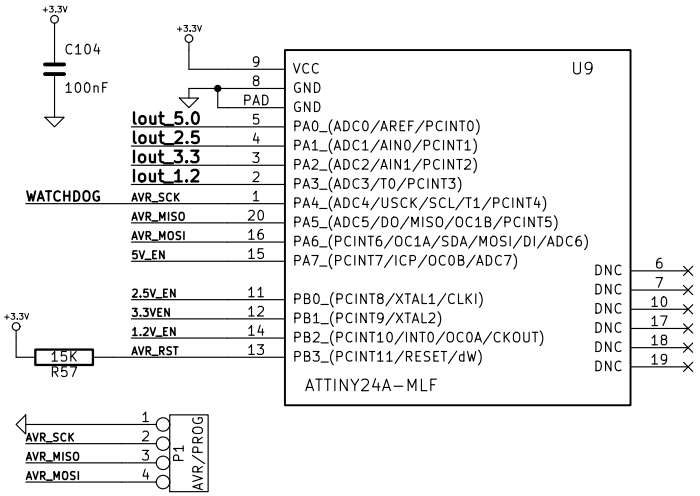
+3.3V
C104
100nF
+3.3V
VCC
GND
GND
PAD
U9
Iout_5.0
Iout_2.5
Iout_3.3
Iout_1.2
WATCHDOG
AVR_SCK
AVR_MISO
AVR_MOSI
5V_EN
2.5V_EN
3.3VEN
1.2V_EN
AVR_RST
PA0_(ADC0/AREF/PCINT0)
PA1_(ADC1/AIN0/PCINT1)
PA2_(ADC2/AIN1/PCINT2)
PA3_(ADC3/T0/PCINT3)
PA4_(ADC4/USCK/SCL/T1/PCINT4)
PA5_(ADC5/DO/MISO/OC1B/PCINT5)
PA6_(PCINT6/OC1A/SDA/MOSI/DI/ADC6)
PA7_(PCINT7/ICP/OC0B/ADC7)
PB0_(PCINT8/XTAL1/CLKI)
PB1_(PCINT9/XTAL2)
PB2_(PCINT10/INT0/OC0A/CKOUT)
PB3_(PCINT11/RESET/dW)
ATTINY24A-MLF
DNC
+3.3V
15K
R57
AVR_SCK
AVR_MISO
AVR_MOSI
P1
AVR/PROG

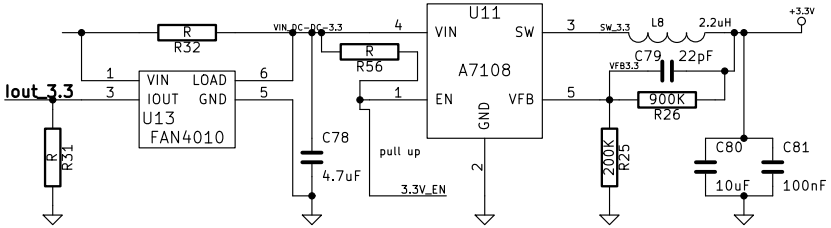
Iout_3.3
R31
R32
R56
U13
FAN4010
VIN
IOUT
LOAD
GND
C78
4.7uF
VIN_DC-DC-3.3
U11
A7108
VIN
SW
EN
VFB
GND
pull up
3.3V_EN
SW_3.3
L8
2.2uH
+3.3V
C79
22pF
VFB3.3
900K
R26
200K
R25
C80
10uF
C81
100nF

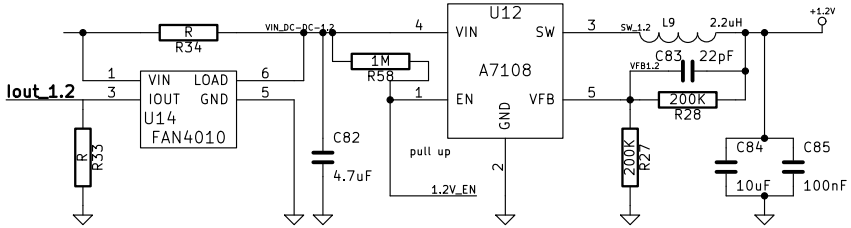
Iout_1.2
R33
R34
U14
FAN4010
VIN
IOUT
LOAD
GND
C82
4.7uF
VIN_DC-DC-1.2
1M
R58
U12
A7108
VIN
SW
EN
VFB
GND
pull up
1.2V_EN
SW_1.2
L9
2.2uH
+1.2V
C83
22pF
VFB1.2
200K
R28
200K
R27
C84
10uF
C85
100nF

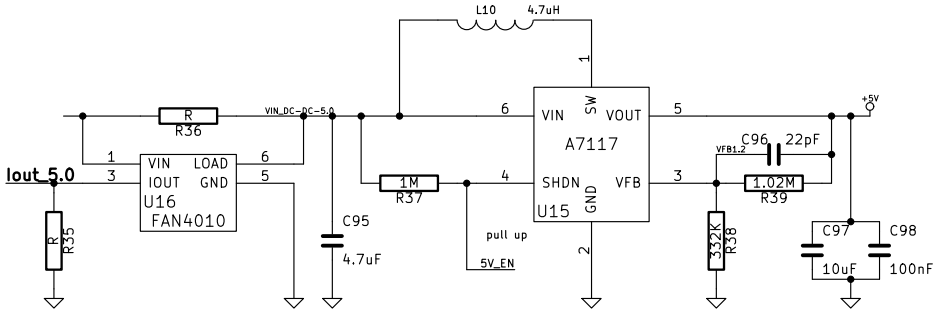
L10
4.7uH
Iout_5.0
R35
R36
U16
FAN4010
VIN
IOUT
LOAD
GND
VIN_DC-DC-5.0
C95
4.7uF
1M
R37
A7117
VIN
SW
VOUT
SHDN
VFB
GND
U15
pull up
5V_EN
+5V
C96
22pF
VFB1.2
1.02M
R39
332K
R38
C97
10uF
C98
100nF

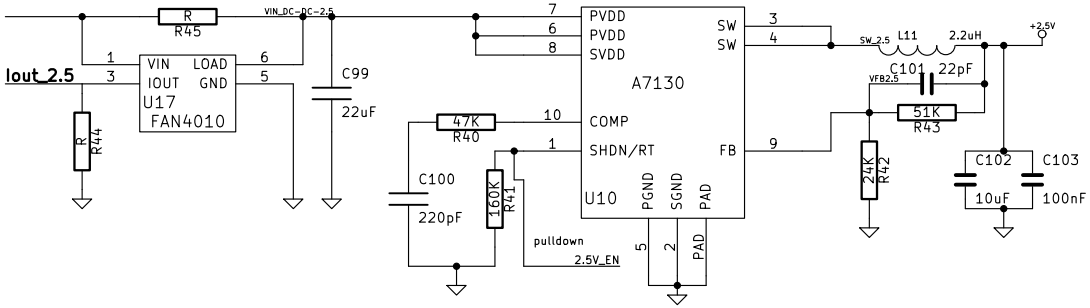
Iout_2.5
R44
R45
U17
FAN4010
VIN
IOUT
LOAD
GND
VIN_DC-DC-2.5
C99
22uF
47K
R40
C100
220pF
160K
R41
pulldown
2.5V_EN
A7130
PVDD
PVDD
SVDD
SW
SW
COMP
SHDN/RT
FB
PGND
SGND
PAD
U10
SW_2.5
L11
2.2uH
+2.5V
C101
22pF
VFB2.5
51K
R43
24K
R42
C102
10uF
C103
100nF

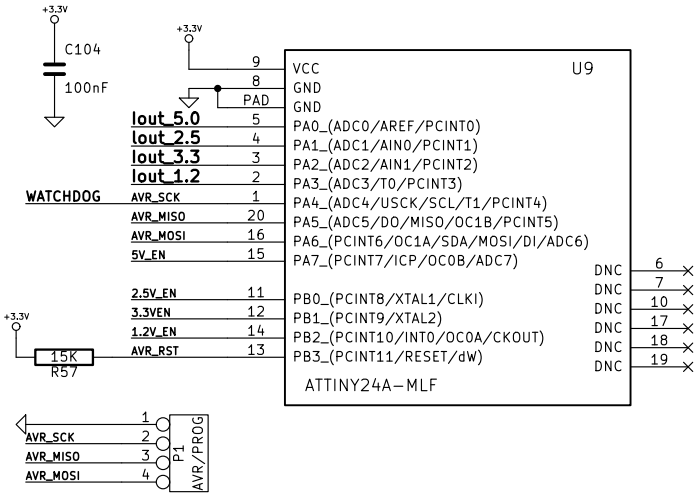
+3.3V
C104
100nF
+3.3V
VCC
GND
GND
PAD
U9
Iout_5.0
Iout_2.5
Iout_3.3
Iout_1.2
WATCHDOG
AVR_SCK
AVR_MISO
AVR_MOSI
5V_EN
2.5V_EN
3.3VEN
1.2V_EN
AVR_RST
PA0_(ADC0/AREF/PCINT0)
PA1_(ADC1/AIN0/PCINT1)
PA2_(ADC2/AIN1/PCINT2)
PA3_(ADC3/T0/PCINT3)
PA4_(ADC4/USCK/SCL/T1/PCINT4)
PA5_(ADC5/DO/MISO/OC1B/PCINT5)
PA6_(PCINT6/OC1A/SDA/MOSI/DI/ADC6)
PA7_(PCINT7/ICP/OC0B/ADC7)
PB0_(PCINT8/XTAL1/CLKI)
PB1_(PCINT9/XTAL2)
PB2_(PCINT10/INT0/OC0A/CKOUT)
PB3_(PCINT11/RESET/dW)
ATTINY24A-MLF
DNC
+3.3V
15K
R57
AVR_SCK
AVR_MISO
AVR_MOSI
P1
AVR/PROG