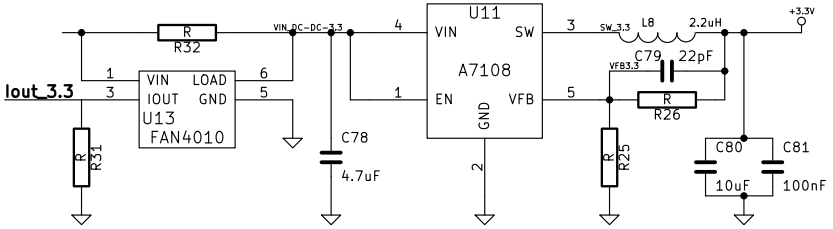
Iout_3.3
R
R32
VIN_DC-DC-3.3
U13
FAN4010
VIN
LOAD
IOUT
GND
R
R31
C78
4.7uF
U11
A7108
VIN
SW
EN
VFB
GND
SW_3.3
L8
2.2uH
+3.3V
VFB3.3
C79
22pF
R
R26
R
R25
C80
10uF
C81
100nF

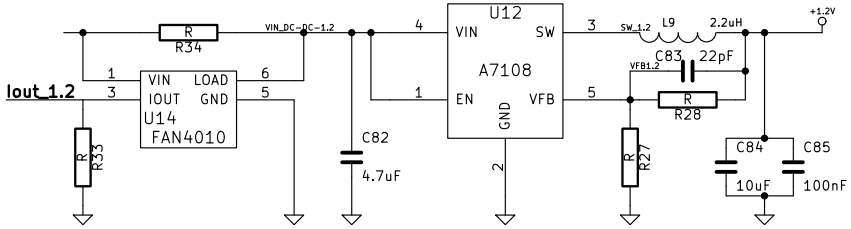
Iout_1.2
R
R34
VIN_DC-DC-1.2
U14
FAN4010
VIN
LOAD
IOUT
GND
R
R33
C82
4.7uF
U12
A7108
VIN
SW
EN
VFB
GND
SW_1.2
L9
2.2uH
+1.2V
VFB1.2
C83
22pF
R
R28
R
R27
C84
10uF
C85
100nF

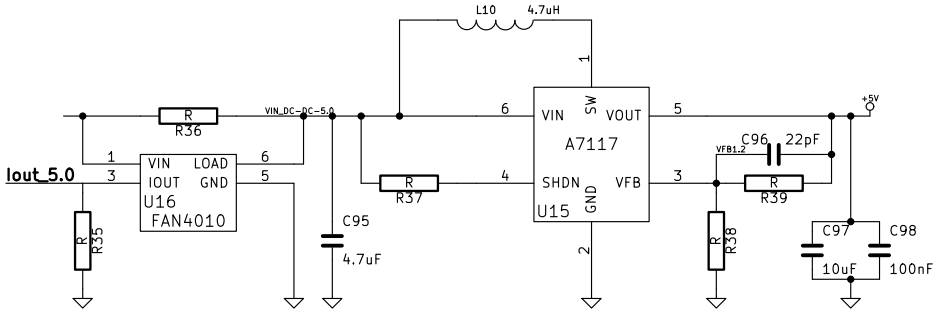
L10
4.7uH
Iout_5.0
R
R36
VIN_DC-DC-5.0
U16
FAN4010
VIN
LOAD
IOUT
GND
R
R35
C95
4.7uF
R
R37
A7117
VIN
SW
VOUT
SHDN
GND
VFB
U15
+5V
VFB1.2
C96
22pF
R
R39
R
R38
C97
10uF
C98
100nF

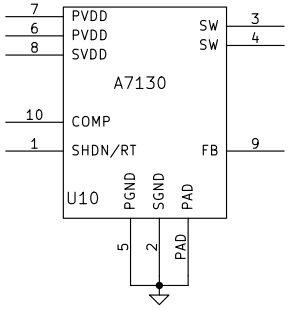
PVDD
PVDD
SVDD
A7130
COMP
SHDN/RT
SW
SW
FB
U10
PGND
SGND
PAD
PAD

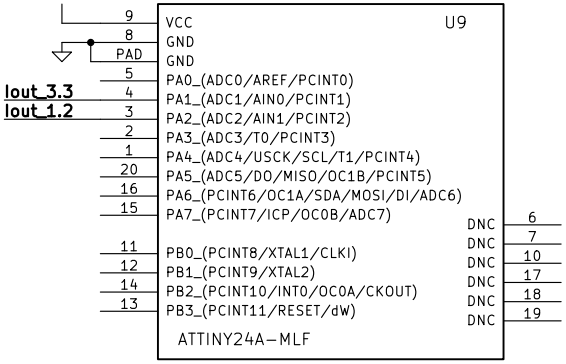
U9
VCC
GND
GND
PAD
Iout_3.3
Iout_1.2
PA0_(ADC0/AREF/PCINT0)
PA1_(ADC1/AIN0/PCINT1)
PA2_(ADC2/AIN1/PCINT2)
PA3_(ADC3/T0/PCINT3)
PA4_(ADC4/USCK/SCL/T1/PCINT4)
PA5_(ADC5/DO/MISO/OC1B/PCINT5)
PA6_(PCINT6/OC1A/SDA/MOSI/DI/ADC6)
PA7_(PCINT7/ICP/OC0B/ADC7)
PB0_(PCINT8/XTAL1/CLKI)
PB1_(PCINT9/XTAL2)
PB2_(PCINT10/INT0/OC0A/CKOUT)
PB3_(PCINT11/RESET/dW)
DNC
ATTINY24A-MLF

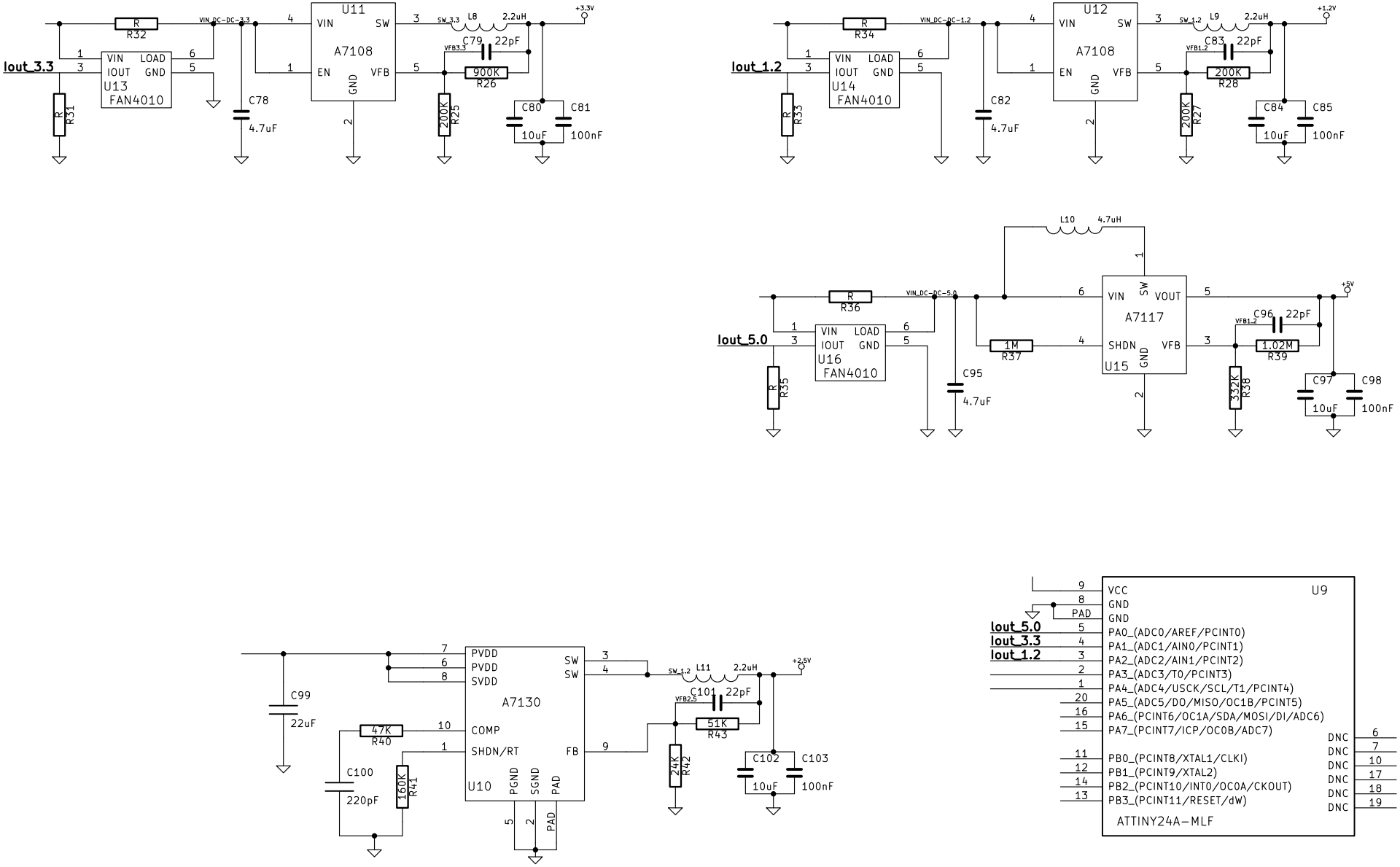
Iout_3.3
U13
FAN4010
VIN
IOUT
LOAD
GND
R31
R32
C78
4.7uF
VIN_DC-DC-3.3
U11
A7108
VIN
SW
EN
VFB
GND
SW_3.3
L8
2.2uH
+3.3V
C79
22pF
VFB3.3
900K
R26
200K
R25
C80
10uF
C81
100nF
Iout_1.2
U14
FAN4010
R33
R34
C82
4.7uF
VIN_DC-DC-1.2
U12
A7108
SW_1.2
L9
2.2uH
+1.2V
C83
22pF
VFB1.2
200K
R28
200K
R27
C84
10uF
C85
100nF
Iout_5.0
U16
FAN4010
R35
R36
VIN_DC-DC-5.0
L10
4.7uH
C95
4.7uF
1M
R37
U15
A7117
VIN
VOUT
SHDN
VFB
GND
SW
+5V
C96
22pF
VFB1.2
1.02M
R39
332K
R38
C97
10uF
C98
100nF
C99
22uF
C100
220pF
47K
R40
160K
R41
U10
A7130
PVDD
PVDD
SVDD
SW
SW
COMP
SHDN/RT
FB
PGND
SGND
PAD
SW_1.2
L11
2.2uH
+2.5V
C101
22pF
VFB2.5
51K
R43
24K
R42
C102
10uF
C103
100nF
U9
ATTINY24A-MLF
VCC
GND
GND
PAD
Iout_5.0
Iout_3.3
Iout_1.2
PA0_(ADC0/AREF/PCINT0)
PA1_(ADC1/AIN0/PCINT1)
PA2_(ADC2/AIN1/PCINT2)
PA3_(ADC3/T0/PCINT3)
PA4_(ADC4/USCK/SCL/T1/PCINT4)
PA5_(ADC5/DO/MISO/OC1B/PCINT5)
PA6_(PCINT6/OC1A/SDA/MOSI/DI/ADC6)
PA7_(PCINT7/ICP/OC0B/ADC7)
PB0_(PCINT8/XTAL1/CLKI)
PB1_(PCINT9/XTAL2)
PB2_(PCINT10/INT0/OC0A/CKOUT)
PB3_(PCINT11/RESET/dW)
DNC
DNC
DNC
DNC
DNC
DNC