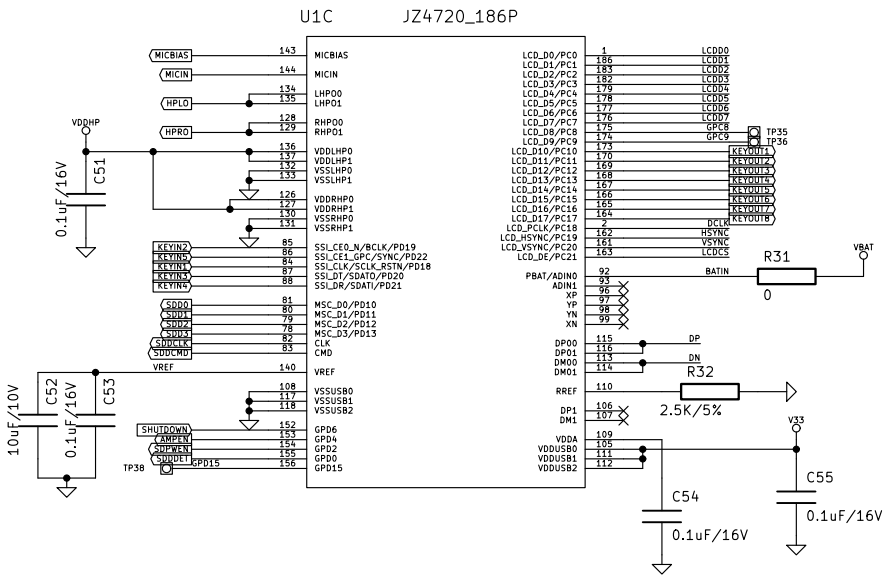
U1C
JZ4720_186P
MICBIAS
MICIN
HPLO
HPRO
VDDHP
C51
0.1uF/16V
KEYIN2
KEYIN5
KEYIN1
KEYIN3
KEYIN4
SDD0
SDD1
SDD2
SDD3
SDDCLK
SDDCMD
VREF
C52
C53
10uF/10V
0.1uF/16V
SHUTDOWN
AMPEN
SDPWEN
SDDET
TP38
GPD15
LCDD0
LCDD1
LCDD2
LCDD3
LCDD4
LCDD5
LCDD6
LCDD7
GPC8
GPC9
TP35
TP36
KEYOUT1
KEYOUT2
KEYOUT3
KEYOUT4
KEYOUT5
KEYOUT6
KEYOUT7
KEYOUT8
DCLK
HSYNC
VSYNC
LCDCS
BATIN
VBAT
R31
0
DP
DN
R32
2.5K/5%
V33
C54
0.1uF/16V
C55
0.1uF/16V

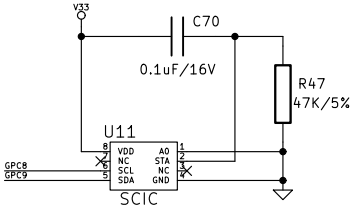
V33
C70
0.1uF/16V
R47
47K/5%
U11
VDD
NC
SCL
SDA
A0
STA
NC
GND
GPC8
GPC9
SCIC

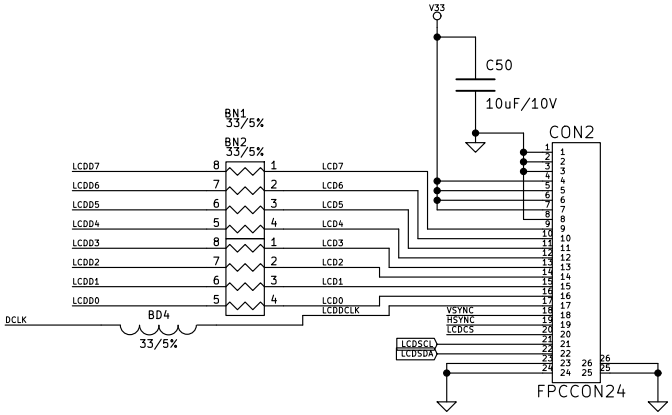
V33
C50
10uF/10V
CON2
BN1
33/5%
BN2
33/5%
LCDD7
LCDD6
LCDD5
LCDD4
LCDD3
LCDD2
LCDD1
LCDD0
DCLK
BD4
33/5%
LCDCLK
VSYNC
HSYNC
LCDCS
LCDSCL
LCDSDA
FPCCON24

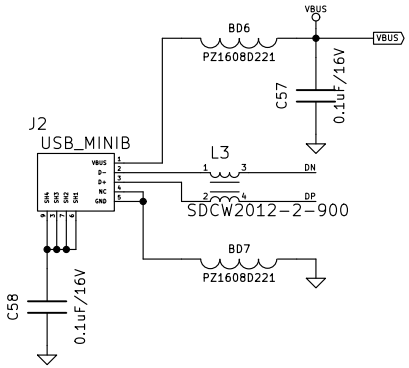
VBUS
BD6
PZ1608D221
C57
0.1uF/16V
J2
USB_MINIB
L3
SDCW2012-2-900
DN
DP
BD7
PZ1608D221
C58
0.1uF/16V

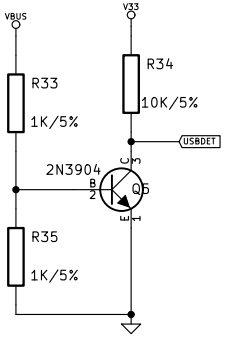
VBUS
V33
R33
1K/5%
R34
10K/5%
USBDET
2N3904
Q5
R35
1K/5%

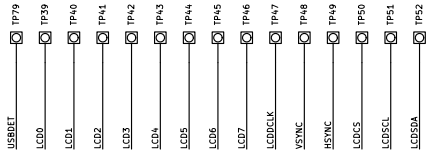
TP79
TP39
TP40
TP41
TP42
TP43
TP44
TP45
TP46
TP47
TP48
TP49
TP50
TP51
TP52
USBDET
LCD0
LCD1
LCD2
LCD3
LCD4
LCD5
LCD6
LCD7
LCDCLK
VSYNC
HSYNC
LCDCS
LCDSCL
LCDSDA

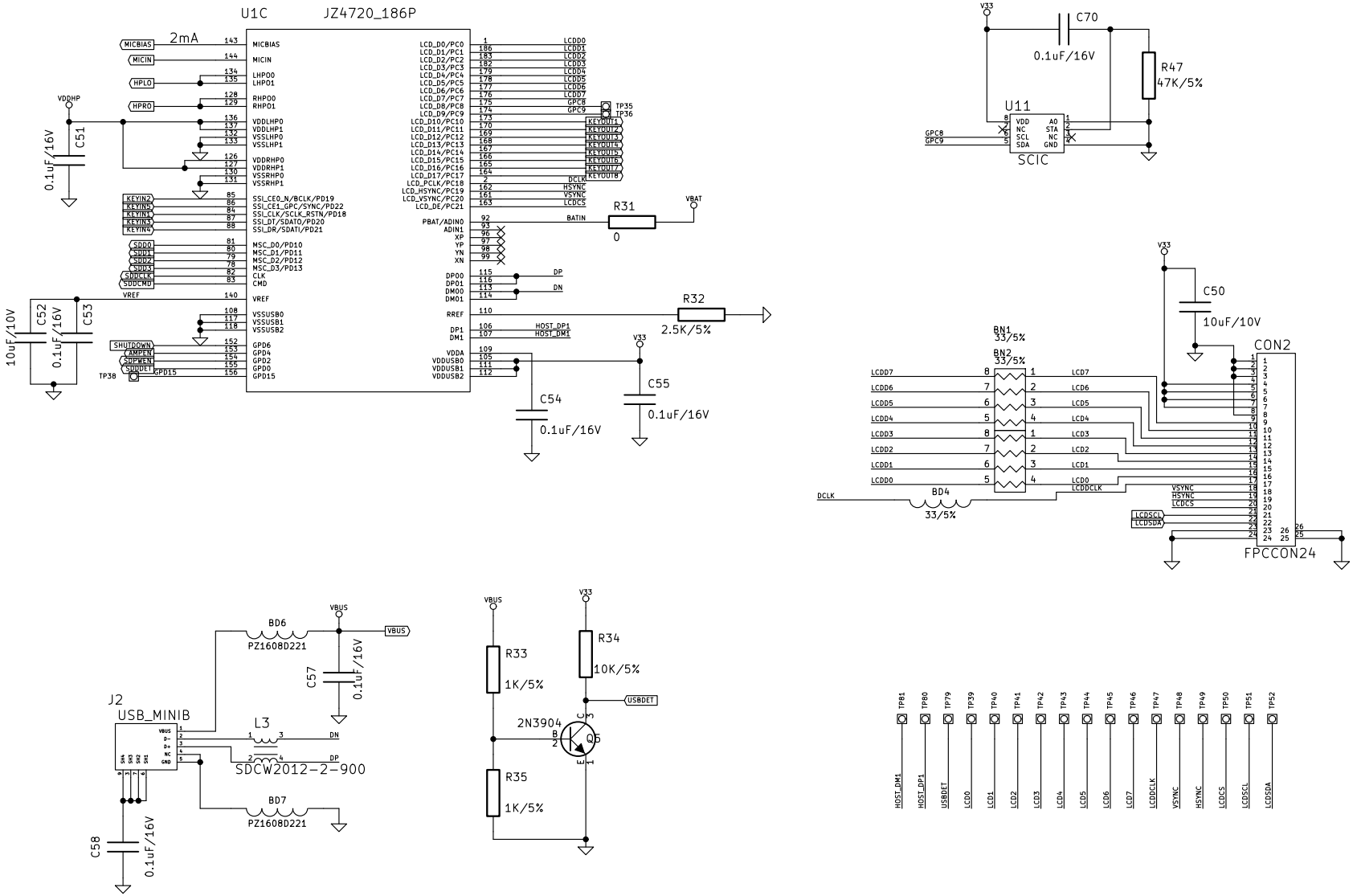
U1C
JZ4720_186P
2mA
MICBIAS
MICIN
HPLO
HPRO
VDDHP
C51
0.1uF/16V
LHPO0
LHPO1
RHPO0
RHPO1
VDDLHP0
VDDLHP1
VSSLHP0
VSSLHP1
VDDRHP0
VDDRHP1
VSSRHP0
VSSRHP1
KEYIN2
KEYIN5
KEYIN1
KEYIN3
KEYIN4
SSI_CE0_N/BCLK/PD19
SSI_CE1_GPC/SYNC/PD22
SSI_CLK/SCLK_RSTN/PD18
SSI_DT/SDATO/PD20
SSI_DR/SDATI/PD21
SDD0
SDD1
SDD2
SDD3
SDDCLK
SDDCMD
MSC_D0/PD10
MSC_D1/PD11
MSC_D2/PD12
MSC_D3/PD13
CLK
CMD
VREF
C52
C53
10uF/10V
0.1uF/16V
VSSUSB0
VSSUSB1
VSSUSB2
SHUTDOWN
AMPEN
SDPWEN
SDDET
TP38
GPD15
GPD6
GPD4
GPD2
GPD0
LCD_D0/PC0
LCD_D1/PC1
LCD_D2/PC2
LCD_D3/PC3
LCD_D4/PC4
LCD_D5/PC5
LCD_D6/PC6
LCD_D7/PC7
LCD_D8/PC8
LCD_D9/PC9
LCD_D10/PC10
LCD_D11/PC11
LCD_D12/PC12
LCD_D13/PC13
LCD_D14/PC14
LCD_D15/PC15
LCD_D16/PC16
LCD_D17/PC17
LCD_PCLK/PC18
LCD_HSYNC/PC19
LCD_VSYNC/PC20
LCD_DE/PC21
LCDD0
LCDD1
LCDD2
LCDD3
LCDD4
LCDD5
LCDD6
LCDD7
GPC8
GPC9
TP35
TP36
KEYOUT1
KEYOUT2
KEYOUT3
KEYOUT4
KEYOUT5
KEYOUT6
KEYOUT7
KEYOUT8
DCLK
HSYNC
VSYNC
LCDCS
PBAT/ADIN0
ADIN1
XP
YP
YN
XN
BATIN
R31
0
VBAT
DP00
DP01
DM00
DM01
DP
DN
RREF
R32
2.5K/5%
DP1
DM1
HOST_DP1
HOST_DM1
VDDA
VDDUSB0
VDDUSB1
VDDUSB2
V33
C54
0.1uF/16V
C55
0.1uF/16V
V33
C70
0.1uF/16V
R47
47K/5%
U11
VDD
NC
SCL
SDA
A0
STA
NC
GND
SCIC
V33
C50
10uF/10V
CON2
BN1
33/5%
BN2
33/5%
LCDD7
LCDD6
LCDD5
LCDD4
LCDD3
LCDD2
LCDD1
LCDD0
LCDDCLK
DCLK
BD4
33/5%
VSYNC
HSYNC
LCDCS
LCDSCL
LCDSDA
FPCCON24
VBUS
BD6
PZ1608D221
C57
0.1uF/16V
J2
USB_MINIB
VBUS
D-
D+
NC
GND
SHA
SHB
SHC
SHD
L3
SDCW2012-2-900
DN
DP
BD7
PZ1608D221
C58
0.1uF/16V
VBUS
R33
1K/5%
R35
1K/5%
2N3904
Q5
V33
R34
10K/5%
USBDET
TP81
TP80
TP79
TP39
TP40
TP41
TP42
TP43
TP44
TP45
TP46
TP47
TP48
TP49
TP50
TP51
TP52
HOST_DM1
HOST_DP1
USBDET
LCD0
LCD1
LCD2
LCD3
LCD4
LCD5
LCD6
LCD7
LCDDCLK
VSYNC
HSYNC
LCDCS
LCDSCL
LCDSDA