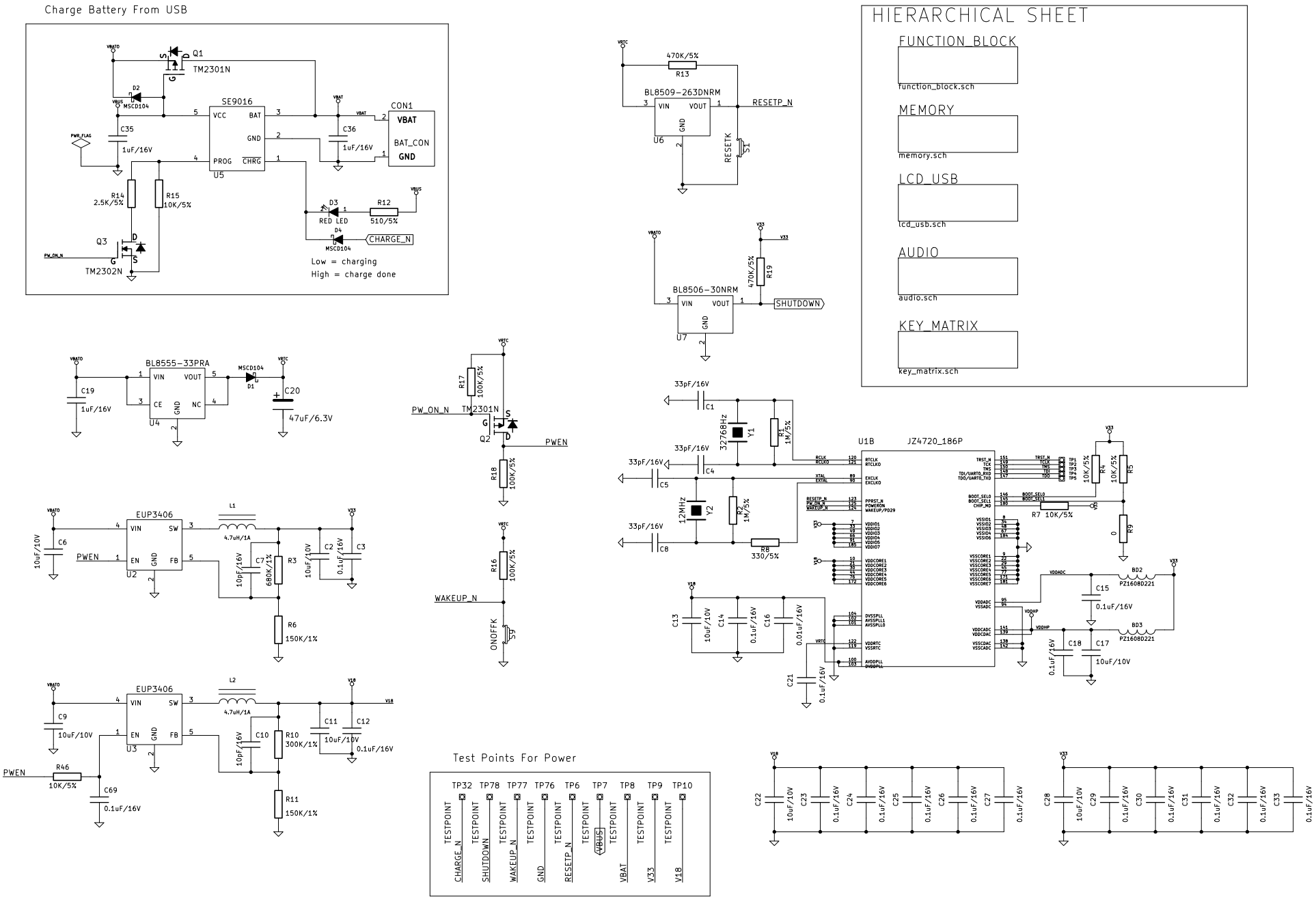
Charge Battery From USB
Q1
TM2301N
D2
MSCD104
SE9016
VCC
BAT
GND
PROG
CHRG
U5
C35
1uF/16V
C36
1uF/16V
CON1
VBAT
BAT_CON
GND
R14
2.5K/5%
R15
10K/5%
D3
RED LED
R12
510/5%
D4
MSCD104
CHARGE_N
Q3
TM2302N
PW_ON_N
Low = charging
High = charge done
470K/5%
R13
BL8509-263DNRM
VIN
VOUT
GND
U6
RESETP_N
RESETK
S1
470K/5%
R19
BL8506-30NRM
U7
SHUTDOWN
HIERARCHICAL SHEET
FUNCTION_BLOCK
function_block.sch
MEMORY
memory.sch
LCD_USB
lcd_usb.sch
AUDIO
audio.sch
KEY_MATRIX
key_matrix.sch
BL8555-33PRA
U4
C19
1uF/16V
MSCD104
D1
C20
47uF/6.3V
R17
100K/5%
TM2301N
Q2
PW_ON_N
PWEN
R18
100K/5%
R16
100K/5%
WAKEUP_N
ONOFFK
S9
33pF/16V
C1
32768Hz
Y1
R1
1M/5%
C4
C5
12MHz
Y2
R2
1M/5%
C8
R8
330/5%
U1B
JZ4720_186P
R4
10K/5%
R5
10K/5%
R7 10K/5%
R9
0
BD2
PZ1608D221
BD3
PZ1608D221
C15
0.1uF/16V
C18
0.1uF/16V
C17
10uF/10V
C13
10uF/10V
C14
0.1uF/16V
C16
0.1uF/16V
C21
0.1uF/16V
EUP3406
U2
C6
10uF/10V
L1
4.7uH/1A
C7
10pF/16V
R3
680K/1%
C2
10uF/10V
C3
0.1uF/16V
R6
150K/1%
EUP3406
U3
C9
10uF/10V
L2
4.7uH/1A
C10
10pF/16V
R10
300K/1%
C11
10uF/10V
C12
0.1uF/16V
R11
150K/1%
R46
10K/5%
C69
0.1uF/16V
Test Points For Power
TP32 TP78 TP77 TP76 TP6 TP7 TP8 TP9 TP10
CHARGE_N
SHUTDOWN
WAKEUP_N
GND
RESETP_N
VBUS
VBAT
V33
V18
C22 10uF/10V
C23 0.1uF/16V
C24 0.1uF/16V
C25 0.1uF/16V
C26 0.1uF/16V
C27 0.1uF/16V
C28 10uF/10V
C29 0.1uF/16V
C30 0.1uF/16V
C31 0.1uF/16V
C32 0.1uF/16V
C33 0.1uF/16V

Charge Battery From USB

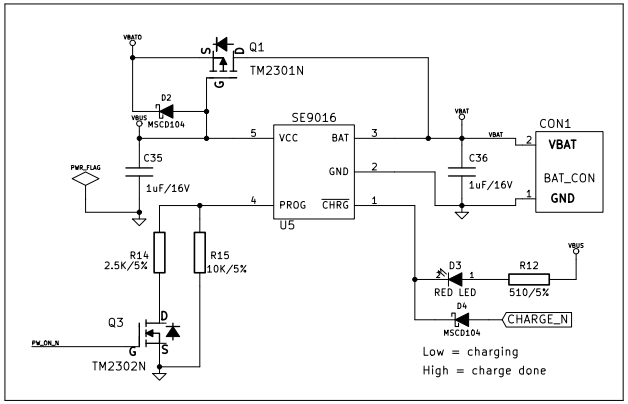

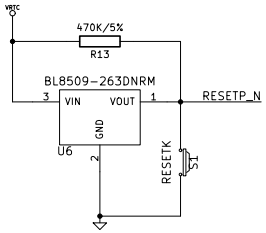

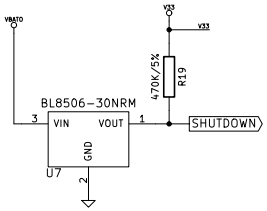

HIERARCHICAL SHEET

FUNCTION_BLOCK
function_block.sch

MEMORY
memory.sch

POWER_TREE
power_tree.sch

LCD_USB
lcd_usb.sch

AUDIO
audio.sch

KEY_MATRIX
key_matrix.sch

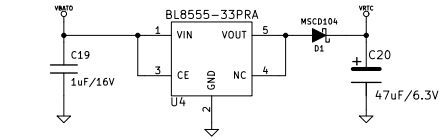

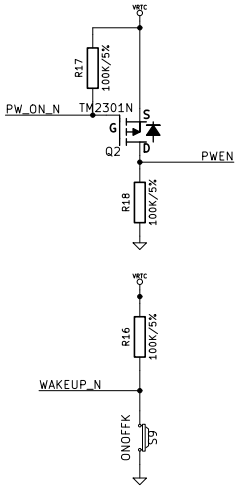

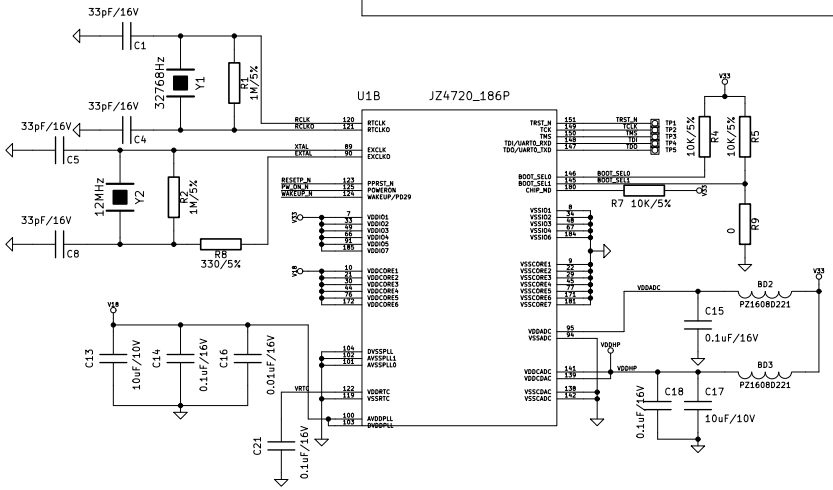

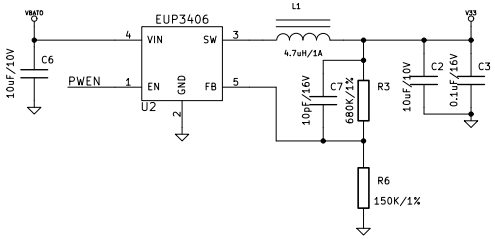

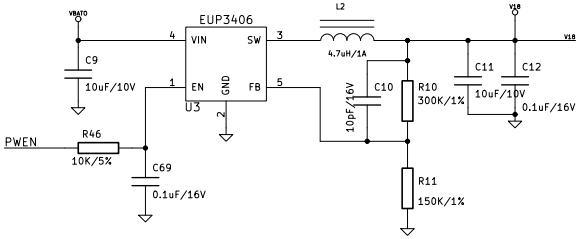
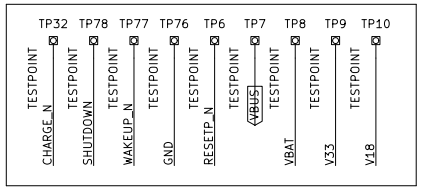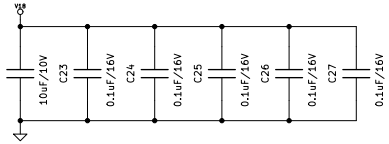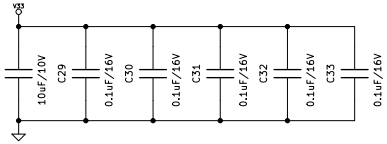
Test Points For Power